M-131-21

Updated January 22, 2024

Black-Topper®
BT-1 Distributors

2008 or newer

Updates & Service Material

E. D. ETNYRE & CO. 1333 S. Daysville Road, Oregon, Illinois 61061
Phone: 815-732-2116 or 800-995-2116 • www.etnyre.com
PARTS / SERVICE: 888-586-1899

M-131-21

Updated January 22, 2024

Black-Topper® ASPHALT DISTRIBUTOR

Updates & Service Material

HOW TO ORDER PARTS

To assure prompt delivery when ordering parts, please furnish the following information: **1)** Complete name and address of consignee. 2) Method of shipment preferred. 3) Serial numbers of units to which parts apply. 4) Complete part numbers and descriptions. 5) Any special instructions.

Specify unit serial number when ordering parts!

WARRANTY

E. D. Etnyre & Co. warrants to the original Purchaser, its new product to be free from defects in material and workmanship for a period of twelve (12) months after date of delivery to original Purchaser. The obligation of the Company is limited to repairing or replacing any defective part returned to the Company and will not be responsible for consequential damages or any further loss by reason of such defect.

The company excludes all implied warranties of merchantability and fitness for a particular purpose. There are no warranties, express or implied, which extend beyond the description of the goods contained in this contract.

This warranty does not obligate the Company to bear the cost of machine transportation in connection with the replacement or repair of defective parts, nor does it guarantee repair or replacement of any parts on which unauthorized repairs or alterations have been made or for components not manufactured by the Company except to the extent of the warranty given by the original Manufacturer.

This warranty does not apply to:

(1) Normal start-up services, normal maintenance services or adjustments usually performed by the selling dealer, factory service representative or customer personnel.

(2) Any product manufactured by E. D. Etnyre & Co. purchased or subjected to rental use.

(3) Any product or part thereof which shows improper operation, improper maintenance, abuse, neglect, damage or modification after shipment from factory.

(4) Any product or part thereof damaged or lost in shipment. Inspection for damage should be made before acceptance or signing any delivery documents releasing responsibility of the delivering carrier.

This warranty and foregoing obligations are in lieu of all other obligations and liabilities including negligence and all warranties of merchantability or otherwise, express or implied in fact or by law

E. D. ETNYRE & CO., Oregon, Illinois 61061-9778
1333 South Daysville Road Phone: 800-995-2116 PARTS / SERVICE: 888-586-1899
www.etnyre.com CustomerService@etnyre.com

Decimal Equivalent Chart

Fraction	Decimal	Fraction	Decimal
1/16	.06	9/16	.56
1/8	.12	5/8	.62
3/16	.19	11/16	.69
1/4	.25	3/4	.75
5/16	.31	13/16	.81
3/8	.38	7/8	.88
7/16	.44	15/16	.94
1/2	.50	1	1.00

Table Of Contents

SERVICE & ADJUSTMENT PROCEDURES

Radar Calibration for DC-2 & S2X Computers:

1. Mark off a 1,000 ft course for testing and calibrating.
2. Inspect the radar for angle, clear view to the ground, cleanliness of lens, moisture free.
3. Turn the Pump Control switch at rear panel to Front Pump control.
4. Disable the flip valves on 1ft of spray bar at the end of the main bar.
5. Turn on control box power with display functioning.
6. Activate the l foot switch that correlates to the bar you disabled (all others off).
7. Adjust the Application Rate all the way down to its lowest setting (.005).
8. Change the display to show Feet Travelled and reset to zero (0).
9. Line up with your start line.
10. As you start to drive the truck (slow and steady), turn on the Master Spray switch to initiate the spray mode and count feet (any errors that pop up on screen during the test will effect the feet counted). Maintain a slow and steady speed, do not shift gears etc.
11. Turn off Master Spray switch at the end of measured course and verify distance counted. Distance counted should be close to the measured distance (3 ft +or-). If not,
    a. Adjust radar angle. Down equals less feet, Up equals more feet. or,
    b. Adjust Speed Cal factor in Computer Set Up, but only if all attempts to correct by changing the radar angle fail. Short on feet, adjust (UP). Long on feet, adjust (Down). One (1) digit equals 10 feet using 1,000 ft. course. Make sure to save adjusted values.
12. Retest distance and angle or calibration until the distributer computes the correct distance.
13. Enable flip valves on spray bar before spraying asphalt.
14. Adjust Application Rate to proper spray rate.

Radar Calibration for BT-1 Computers

1. Mark off a 300 ft course for testing and calibrating.
2. Inspect the radar for angle, clear view to the ground, cleanliness of lens, moisture free.
3. Turn Function knob at rear control box to (LOAD).
4. Turn on control box power with display functioning.
5. Turn off all 1ft control switches.
6. Line up with your start line.
7. Change the display to show Feet Travelled and reset to zero (0).
8. As you start to drive the truck (slow and steady) turn on the Master Spray switch to initiate the spray mode and count feet.
9. Turn off the Master Spray switch at the end of the measured course and verify the distance counted. Distance counted should be close to the measured distance (1 ft + or -). If not,
10. Enter Computer Set Up Screens to Distance Calibration screen.
11. Line up with your start line.
12. As you start to drive the truck (slow and steady), press the Pump Strut button to strut the calibration process. At the end of the measured course, press the Pump Start button to end the process.
13. Shut off the power to the control box to save the calibration.
14. Line up with your start line.
15. Change the display to show Feet Travelled and reset o zero (0).
16. As you start to drive the truck (slow and steady) turn on the Master Spray switch to initiate the spray mode and count feet. Turn off the Master Spray switch at the end of the measured course and verify distance counted. The distance counted should be close to the measured distance (1 ft +or-). Re-calibrate if needed.

Servicing Asphalt Pump Shaft Packing

**Note: Packing on this application, is allowed to seep which lubricates the Pump Shaft. Tightening it to the point of it not seeping anymore, will cause the packing to overheat and eventually leak worse. (Do Not Overtighten)*

1. Remove the shield protecting the pump shaft drive coupling.
2. Remove the (2) Lock nuts securing the 2 piece packing gland. (Sometimes if Drive Coupling is installed too close to the Asphalt Pump asm there is not enough room to remove the lock nuts causing the removal of drive coupling to gain access to re-pack the pump shaft).
3. Remove Pump Shaft Drive Coupling (if Necessary).
4. Remove the lock nuts, locking plates and packing glands to allow access to remove packing.
5. Remove Packing (preferred) to install new.
6. Soak new packing in motor oil.
7. Install new packing, rotating joints as you install pieces and it should hold (4-5) pieces of packing # 6600310.
8. Install Packing Glands and secure with locking plates and lock nuts (Tighten nuts evenly to keep the Glands in line with the shaft. (Do Not Overtighten)
9. Install the Coupling, if it was removed *(*Note see torque spec. instructions in component illustrated breakdown section.)*
10. Install shield. (Torque gear box mounting bolts to 25 ft/lbs).
11. Re-tighten if needed. *(*Note See an illustrated break down of Asphalt Pump & shaft in component Illustrated breakdown section).*

Servicing 4-way Valve Packing

1. Make sure 4-way Valve keyway is in the (12 o'clock) position before removing anything.
2. Remove Rotary Actuator for (Bar Circ) the one mounted to the bracket @ rear location (Make note of mounting location or take pictures to insure installation is correct).
3. Remove front (Spray) Rotary Actuator from shaft of 4-way Valve.
4. Loosen and remove (2) Nuts & washer securing the spring & packing.
5. Remove the packing that is remaining (Replace packing - Do Not Add to what is left).
6. Soak new packing in motor oil, Install (3) new pieces of Packing # 3340029, rotating the joints as they are installed. Install spring, # 3341464 (if new is needed). Install washer # 0197070 (1-3/8) if not previously installed to complete the installation and update the 4-way valve to current configuration.
7. Install first nut and tighten up tight to the housing, then back off ¼ turn. This will allow valve to turn, but not Move (In & Out) which will allow oil to flow the wrong direction and by-pass valve causing it to spray light by returning material to tank or flow into the bar when you do not want it there.
8. Install the Second nut and secure the first (lock together tightly) Make sure you can still rotate and turn 4-way with wrenches before installing actuators.
9. Install the key and coupling (make sure they fit tight) could affect the accuracy of the timing.
10. Install Spray Actuator in original position.
11. Install and insert Bar Circ Actuator into Spray Actuator, should be in the same position of orientation as the Spray Actuator and secure and torque to (20ft/lbs) with mounting bolts to the bracket. (Go to Installation of Actuators page if needed)
12. Check Timing of 4-way Valve (Go to Adjusting 4-way timing procedure if adjustment if needed)
13. Test 4-way operations / Load (12 o'clock) Bar Circ (9 o'clock) & Spray (6 o'clock) the less margin of Timing errors, the better the 4-way Valve and distributor will perform.

*(*Note See an illustrated break down of 4-way Valve & Actuators in component Illustrated breakdown section)*

Servicing Tank Suction Valves & Gaskets

1. Empty tank of (all) material inside (elevate front of truck if possible to make sure you get it as empty as possible)
2. Elevate Rear of truck if possible as a safety measure (any left- over material will flow to front of tank)
3. Open Fill-line cap / Activate and open Tank Valve and make sure Tank is empty before removing Valve
4 Open Strainer Box lid and inspect valve for other issues (Broken Spring / missing snap ring etc)
5. Activate and open Tank Valve before removing the (8) bolts attaching the Tank Valve to the Strainer Box
6. Remove Tank Valve slightly about 2 inches / then allow Tank Valve to close releasing spring tension.
7. Mark to identify & remove air lines, then you can remove and relocate valve to workspace.
8. Clamp valve in vise without crushing or imprinting the gasket sealing surfaces or air chamber asm.
9. Test with shop air or other source (A) is the open side closest to the valve (B) is closed @ sight glass.
10. If Tank Flange gasket is the only repair needed, replace gasket (Green portion toward tank) and proceed to #(19).
11. If Air chamber or spring require service proceed with the following.
12. Remove cap with sight glass attached. Lay parts out in the order they are removed.
13. Loosen lock nut inside (slowly) spring tension will be relieved as it is removed.
14. Remove shaft and spring / pay attention to washer in behind spring and note where it belongs.
15. Dis-assemble air chamber piece by piece and replace O-rings, Packing & Seals and re-assemble.
16. Re-insert shaft with spring & washer, place valve nose down/ gasket @ and on the floor.
17. Press downward on valve and compress slightly to get lock nut started inside air chamber asm.
18. Tighten down lock nut compressing the spring and / Inspect & clean sight glass on end cap, apply thread sealant if removed. (This will allow a visual indication of Tank Suction Valve position & operation) Install Cap.
19. Re-install valve into vise and bench test the Tank valve one more time before installing on Distributor.
20. Place Valve asm into Strainer Box / Install air lines and activate and open Tank Valve asm.
21. Install 510 Loctite gasket eliminator on flange and install valve with mounting bolts.
22. Operate valve to open and closed several times to imprint the new gasket on tank flange.
23. Check and clean Strainer.
24. Check Packing seal on Strainer Lid (replace if needed) Install and secure Strainer Lid.
25. Fill distributor and safely test for leaks

*(*Note See an illustrated breakdown of the Tank Suction Valves in component Illustrated breakdown section)*

Servicing Spraybar Swivel Joints

**Note: Swivel joint assemblies tend to leak past the O-ring between the 2 main component parts, changing the mounting gaskets or tightening the nuts that secure it to the plumbing will not fix the leak.*

1. Determine if the joint is able to be disassembled and serviced or should be replaced (If the joint moves too much side to side or has broken studs / replace swivel joint).
2. Make sure that Spraybar is sucked back and little or no material is left in the Circulating System.
3. Support the portion of Spraybar or Circulation Plumbing needing to be disassembled.
4. Remove nuts & lock washers that attach the assemble to the bar or circulating pipes (note the Grease zerk position, and which side of joint pivots to make sure you install it the same way)
5. Separate and remove Swivel Joint (Make sure internal plumbing is intact and rigid. 3x3 Standard Bar uses a pipe slip joint method / Big Bar & Variable Width bars, use a coupling w/ O-rings to get a positive seal at all connections. On Variable Width bars the circulating pipe may have to be removed @ (2) joints to get it removed from unit).
6. If replacement is you repair method, make sure to clean all gasket surfaces, check internal plumbing and replace O-rings if needed / if servicing joint (Go to step # 8).
7. Install Joint with new gaskets, position grease zert as noted earlier, Do not overtighten nuts they are attached to a weld on stud.
8. To disassemble Swivel Joint you will need to 1st clean the part. (Hard material will be much harder to disassemble).

9. Remove Grease zert & adapter to gain access to the (47) ball bearings, holding the joint together.
10. Rotate the movable ½ of joint and collect the ball bearings that fall out (you may have to creatively compress the joint together to disassemble).
11. Separate joint to gain access to O-ring inside (inspect joint and ball bearing grooves to make sure that it is not worn too much to rebuild).
12. Lubricate and install new O-ring / rotate and reinstall (47) ball bearings / install adapter and grease zert / rotate and grease fully (400deg High temp) before installation on unit.
13. Clean all gasket surfaces, check internal plumbing, and replace O-rings if needed / Return to step (7) to complete the install.

*(*Note See an illustrated break down of swivel joint in component Illustrated breakdown section)*

Adjusting Pump Neutral on 42 & 90 Series Pumps

1. Pump neutral may need to be adjusted, if the Hydraulic Motor turning the Asphalt Pump turns when Etnyre Control system is turned (Off} or is operated in manual with Rear Pump Control turned all the way CCW to (Off}. Adjusting is better with 2 people:1 adjusting and 1 watching Asphalt Pump Shaft rotation at the rear of Distributor Truck.
2. Locate adjustment and gather tools to make adjustment (be careful @ all times Due to live PTO operation on the pump system).
3. Direction of adjusting neutral screw varies depending on style and location of Hydrostatic pump, (normal and correct direction of shaft rotation is CCW standing @ the rear bumper looking forward). Loosen jam nut while holding the allen head adjustment screw, turn screw slowly in CCW direction, if the pump shaft speeds up, you are turning it the wrong direction, turn it only till the pump shaft quits turning.
4. Rev up the engine and verify that pump shaft does not try to turn, a slight adjustment may be necessary if it does.
5. Once you are satisfied with the neutral adjustment, it is recommended to test the (EDC} current to the Hydrostatic Pump Controller, or (EDC} once the value is determined, set the DC/Ma value in the Computer set-up of the Etnyre Control system under EDC Threshold.

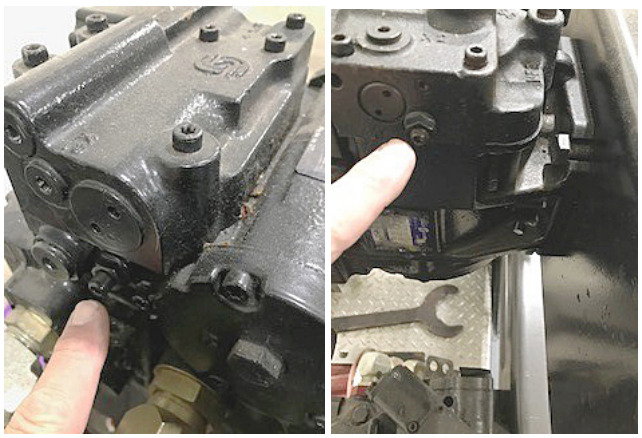

42 Series 90 Series

Testing EDC Threshold on 42 & 90 Series Pumps

**Note: EDC pump current in (DC/Milliamp's) is measured to accurately set the current needed to initially rotate and turn the Asphalt Pump shaft, this is installed and entered into the computer setup screen Threshold MA =) once it is measured, current range should be: (10.0 -19.0 Dc/ma)*

1. Install Service adapter # 3371084 @ pump connector (easiest and fastest) or install your meter in series across any connection that you will have to dismantle to connect to the power wire between rear control box pump activation relay and the pump EDC connector.
2. Once connected, operate pump system in (LOAD) on manual mode with Pump Control pot turned full ccw or (Off) meter should read (6.0 -9.0Dc/ma)
3. Rotate Pot (cw) to increase current and stop when the Asphalt Pump shaft just starts to turn (ccw).
4. The current measured on your meter at this point is your EDC Threshold reading, should be between (10.0 & 19.0 Dc/ma)
5. If the EDC Threshold is not within those #s, or is turning (CW) for any reason, the pump neutral may have to be adjusted to properly set the EDC Threshold. Refer to Adjusting Pump Neutral procedure section of this manual.

Testing EDC Threshold

Aventics Valve Diagnostics

LEFT SIDE VALVE BANK
-SET S2 TO 0
-SET S3 TO 2

SEE S1 FOR DIP SWITCHES
-DIP SWITCH 3 SET TO ON
-DIP SWITCH 1, 2 AND 4 SET TO OPEN

RIGHT SIDE VALVE BANK
-SET S2 TO 0
-SET S3 TO 3

SEE S1 FOR DIP SWITCHES
-DIP SWITCH 3 SET TO ON
-DIP SWITCH 1, 2 AND 4 SET TO OPEN

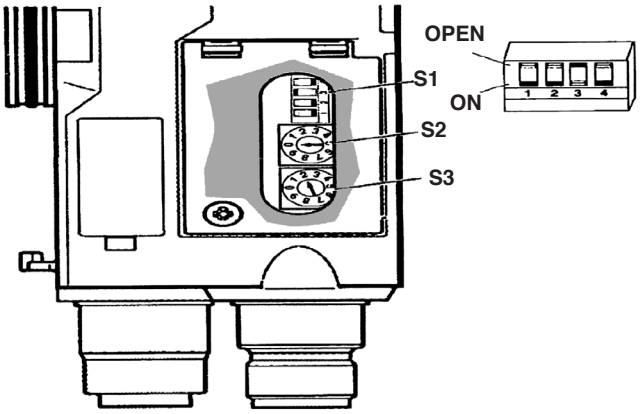

AIR VALVE CAN MODULE

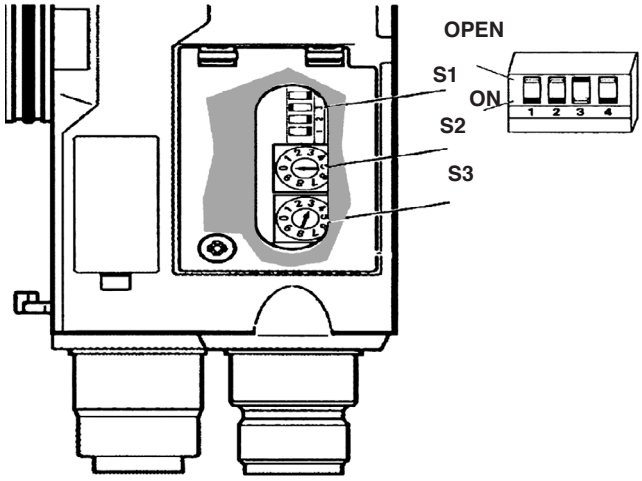

AIR VALVE CAN MODULE

Aventics Valve Diagnostics

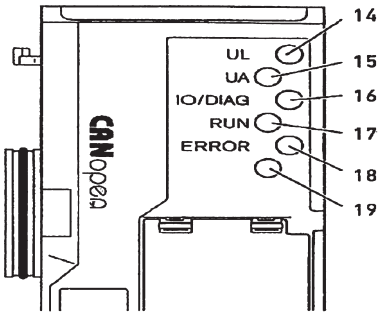

Meaning of the diagnostic LED'S

Designation	Color	State	Meaning
UL(14)	Green	Illuminated	Supply voltage is greater than (18 VDC)
	Red	Flashes	Supply voltage is less than (18 VDC) and greater than (10 VDC)
	Red	Illuminated	Supply voltage is less than (10 VDC)
	Green/Red	Off	Supply voltage too low or missing
UA(15)	Green	Illuminated	Supply voltage is greater than (21.6 VDC)
	Red	Flashes	Supply voltage is less than (21.6 VDC) and greater than (10 VDC)
	Red	Illuminated	Supply voltage is less than (10VDC)
	Green/Red	Off	Supply voltage is too low or missing

Aventics Valve Diagnostics Cont'd

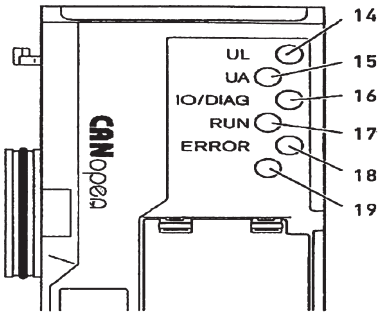

Meaning of the diagnostic LED'S

Designation	Color	State	Meaning
IO/Diag(16)	Green	Illuminated	The configuration is (OK) and the backplane communication is (OK)
	Green	Flashes	Incorrect CAN address
	Red	Illuminated	Diagnostic message from module present
	Red	Flashes	Configuration or backplane communication error
Run(17)	Green	Illuminated	Operation display, Module is in the (Operational) State
	Green	Flashes (Slow)	Module is in (Pre-Operational) State-Slave is waiting for start signal from CAN Master
	Green	Flashes (Once)	Module is in the (Stopped) State
	Green	Off	Module is in the (Initializing) State
Error(18)	Red	Illuminated	Module is in the (BUS Off / Non Active) State
	Red	Flashes (Once)	Module is in the (Error Passive) State-at least one error counter has reached/exceeded limit.
	Red	Flashes (Twice)	Module is in the (Error Control Event) State Monitoring error has occurred
	Red	Flashes (Three)	Module is in (Sync Error) State-Transmission interrupted or out of prescribed allowance
None(19)	None	None	Not assigned

Testing GPM with Photo Tach

1. Make sure Distributors engine is left (Off) until ready to start.
2. First thing would be to clean a spot off on the Asphalt Pump drive shaft or drive coupling to install a reflective strip for you photo tach to read the RPM of the pump shaft.
3. Install a reflective strip on shaft.
4. Start the Distributor & activate the pump and allow the pump shaft to turn @ a random speed, take a photo tach reading of RPM (Testing formula : RPM X 0.61 = GPM).
5. Test @ various speeds and check accuracy.
6. If results do not match, (check the pump pulses # in the Computer setup screen - Motor Pul / Rev = Newer distributors: 42 Series pump = 43 pulses, 90 Series pump = 46 pulses.

(If the hydraulic motor has been altered for more speed or more torque) those numbers above maydiffer / pulses may have to be adjusted to get the correct GPM reading)

[GPM Test Formula – RPM X 0.61 = GPM]

Testing Electronic Tilt Switches

1. Using Test adapter # 3371144, eliminates probing wires and plugs directly into the end of the Harness and is used with any digital volt ohm meter.
2. Terminal # 3 should have 12vdc using ground from #1 & #6.
3. Terminal # 1 is the source ground to the sensor.
4. Terminal # 6 is the ground returning from the Tilt Switch to the Spray Delay relay on W1 or mac Valves for W2, W3 and Marker (if equipped) and activating the spraybar section.
5. If adapter is plugged into harness and 12vdc on red wire @ # 3, bar turns on / replace Tilt Switch.
6. If adapter is plugged into harness and 12vdc on red wire @ #3, bar does not turn on / problem in ground wire inside harness from terminal # 6, / check and repair wiring.
7. If adapter is plugged into harness and no 12vdc / problem in wiring harness either 12vdc, ground or both are lost. / Check and repair wiring.

Led Light Status on Sensor:

Green Light: Unit has received power and is On

Red Light: When the red light is on solid, Operating Properly
When the light is blinking, a Fault Code has been detected.

Hydrostatic Drive System - PTO Driven - 42 Series

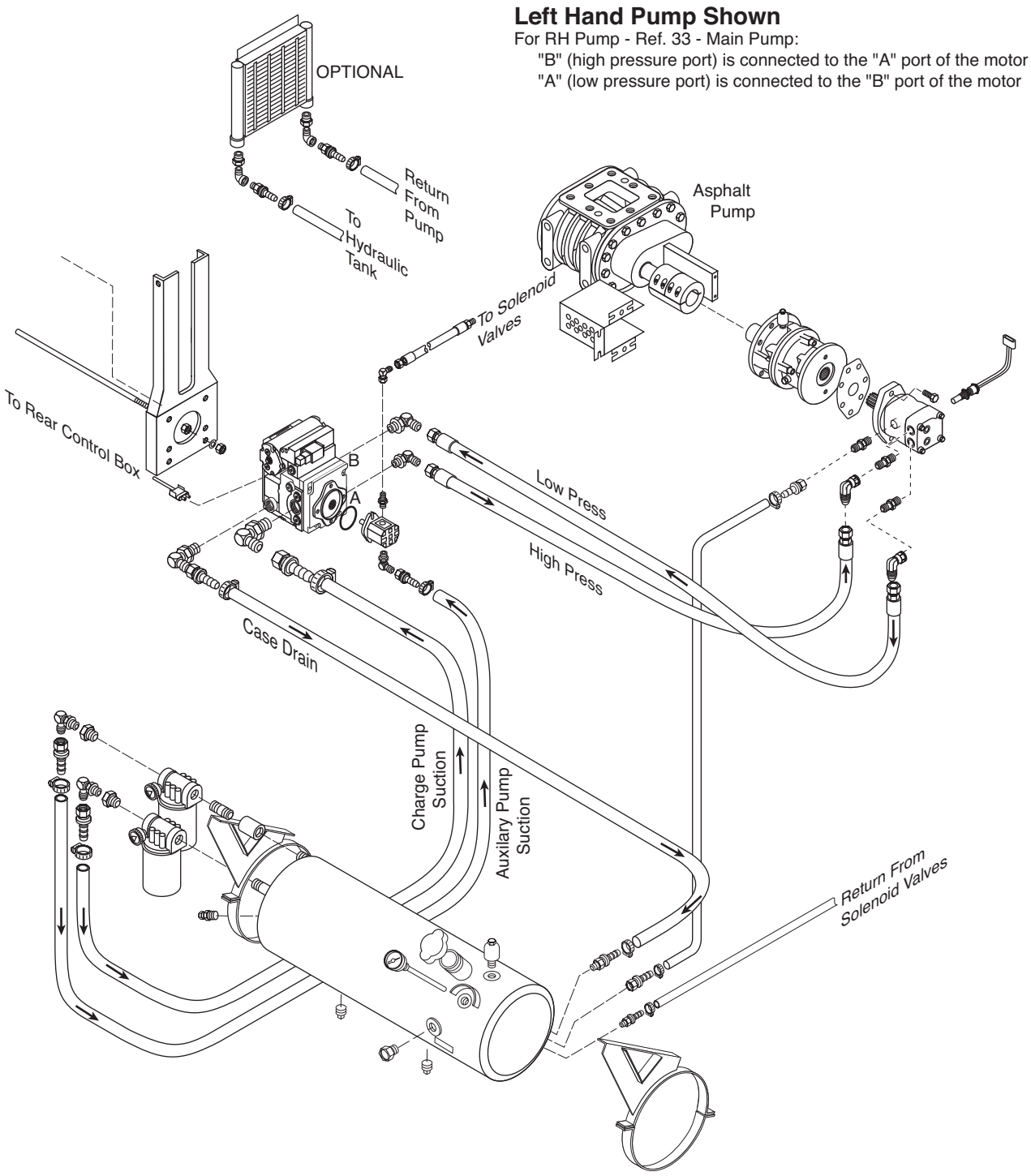

Planetary Gearbox - Asphalt Pump

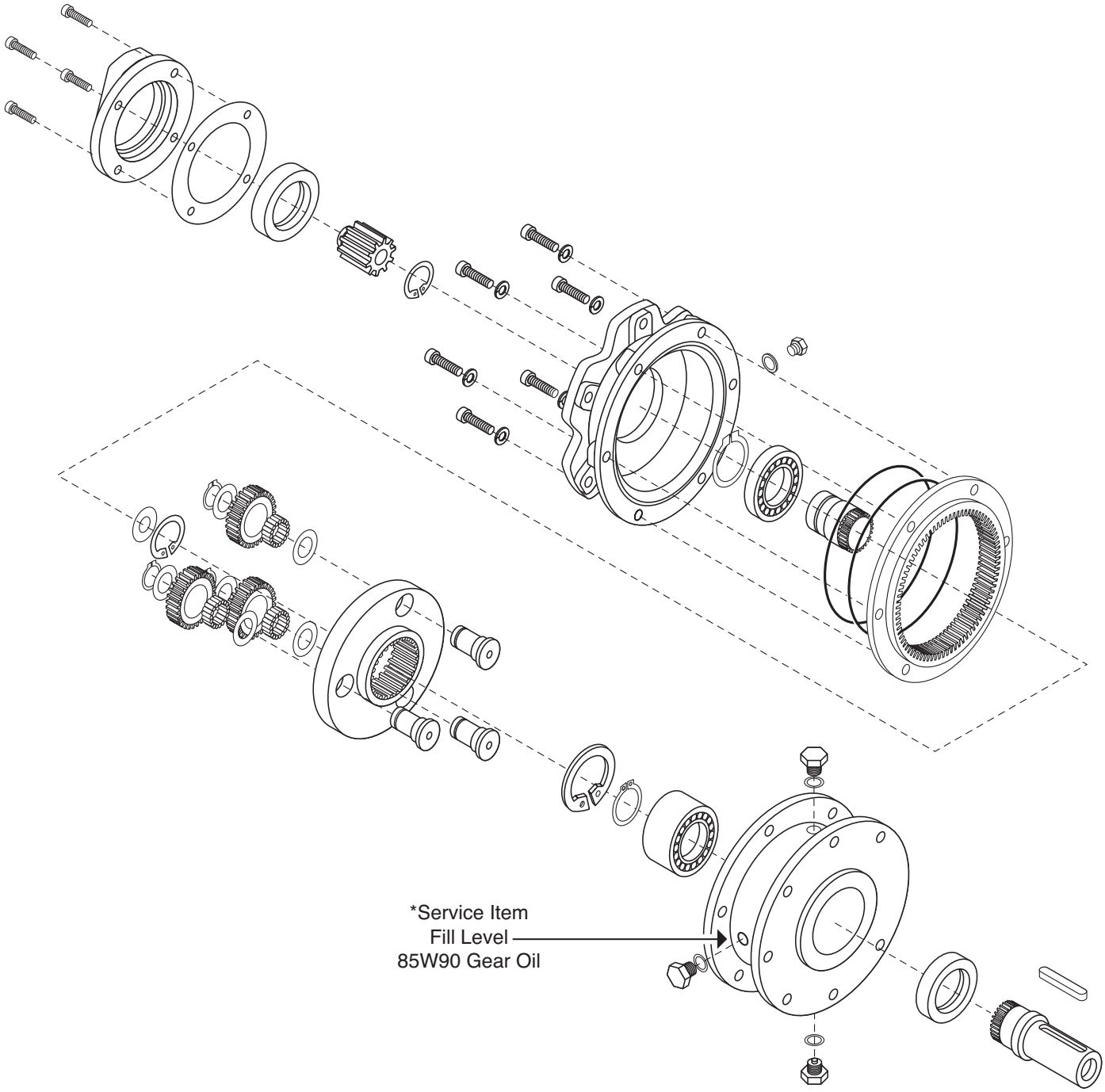

Asphalt Pump Assembly

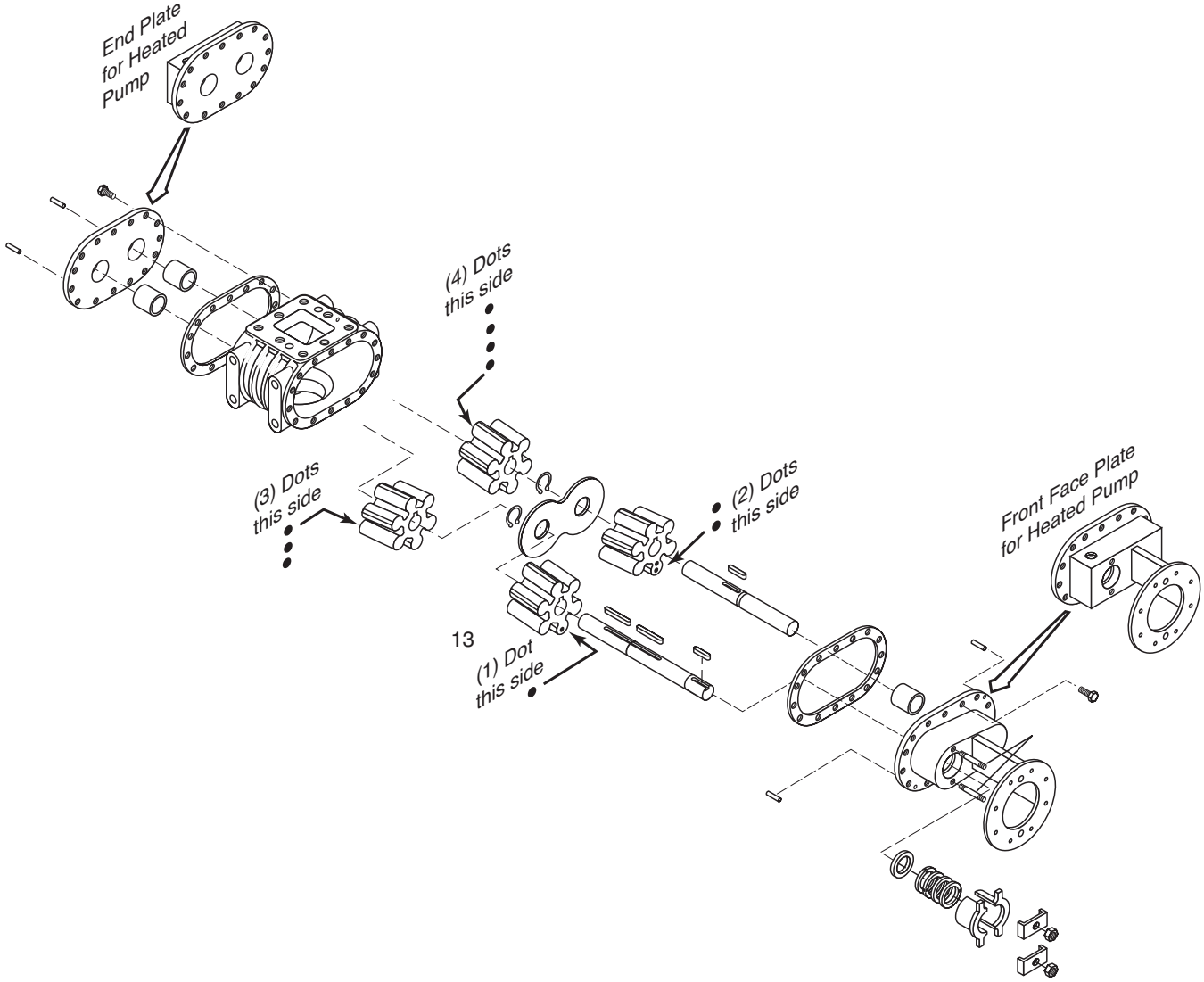

4 Way Valve Asm and Controls

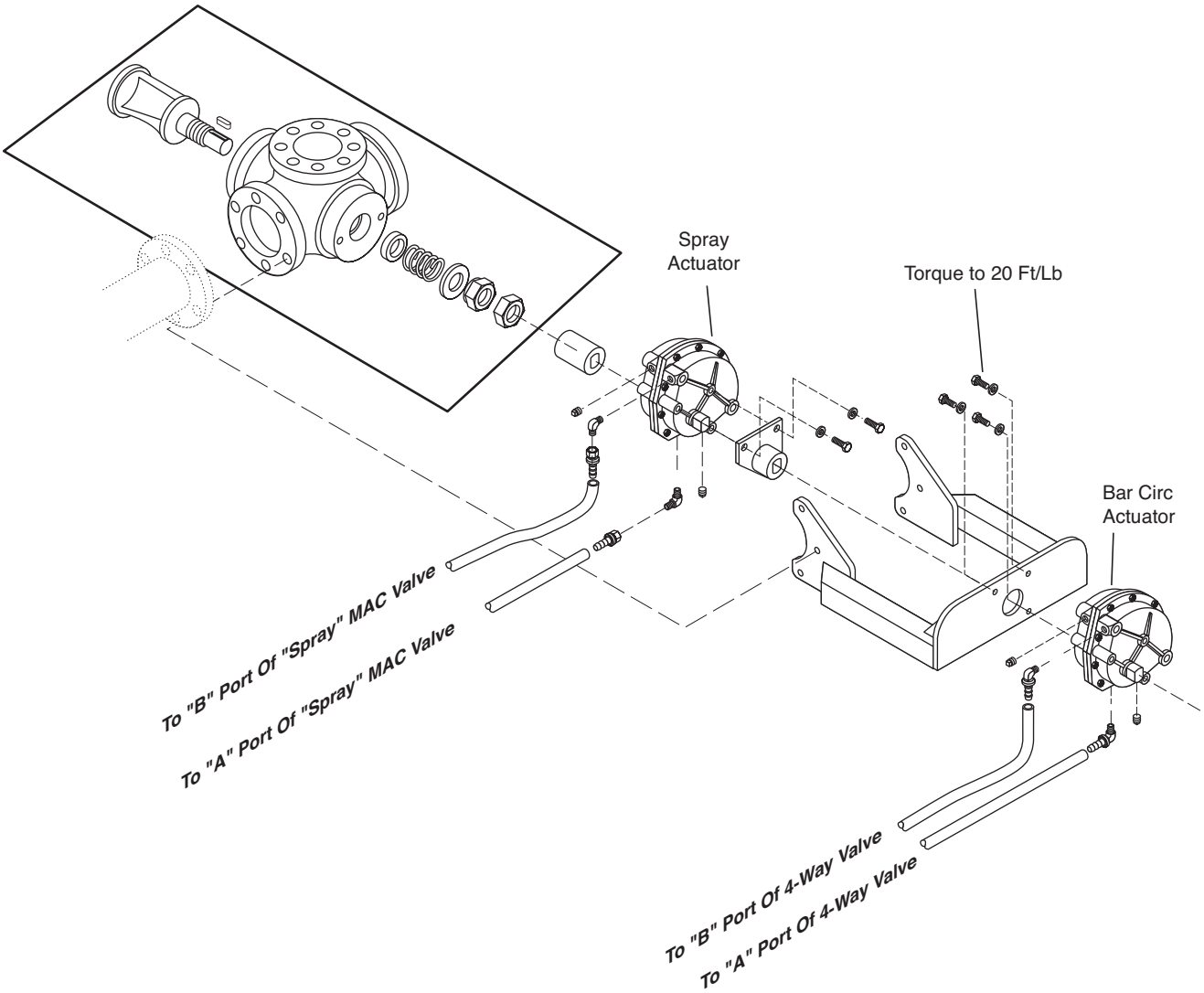

Installing (6445090) Shaft Coupling between Asphalt Pump and Gearbox

1. Coat all coupling bolts with anti-seize before installing.
2. Align the asphalt pump shaft keyway to top dead center.
3. Install shaft key in asphalt pump shaft.
4. Slide coupling onto asphalt pump shaft. The asphalt shaft and coupling engagement should be a minimum of 3.03 inches. Note: It works best to loosen the screws in the coupling just enough for the coupling to just slide on to the shaft.
5. With the key installed in the gearbox shaft, insert the gearbox shaft into the coupling until the gearbox mounting flange firmly touches the asphalt pump faceplate. Shaft engagement in step three should be maintained. Note: Again it works best to loosen the screws in the coupling just enough for the gearbox shaft to be inserted while maintaining the same fit between the asphalt pump shaft and the coupling.
6. Align the gearbox for proper port location and so that two of the mounting holes align with both tapped holes in the asphalt pump faceplate. Install two 5/16" grade 8 bolts into the tapped holes in the faceplate. *Note: Do not tighten the mounting bolts but install them so that they support the weight of the gearbox and maintain contact between the gearbox and the pump faceplate.*
7. The gap between the halves of the coupling should be equal. To maintain the desired gap, 1/32" shim stock can be inserted by the first bolt tightened and then can be pulled out when the opposite side is tightened.
8. With the socket head cap screws at the top dead center, start the tightening sequence at 66 ft/lbs. *Note: When facing the asphalt pump there are six rows of screws the first being closest to the gearbox. The tightening sequence is to start in row six (at the top left) then to row one (the lower right then to the lower left) and then to row six (the upper right). Use this same pattern for rows five and two and also rows four and three.*
9. Repeat the tightening sequence in step seven at 133 ft/lbs.
10. Repeat step eight for verification.
11. Tighten gear box mounting bolts to 25 ft/lbs.

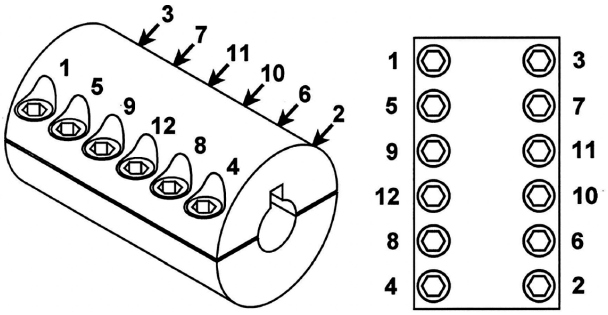

Correct installation can be verified when hydraulically driving the asphalt pump. If the hydraulic motor and gearbox assembly move due to misalignment of the shafts and coupling the coupling should be removed and inspected for internal damage and then should be reinstalled. If movement of the gearbox and motor cannot be corrected engineering should be notified and the particular unit should not be shipped.

Timing Adjustment of Actuators

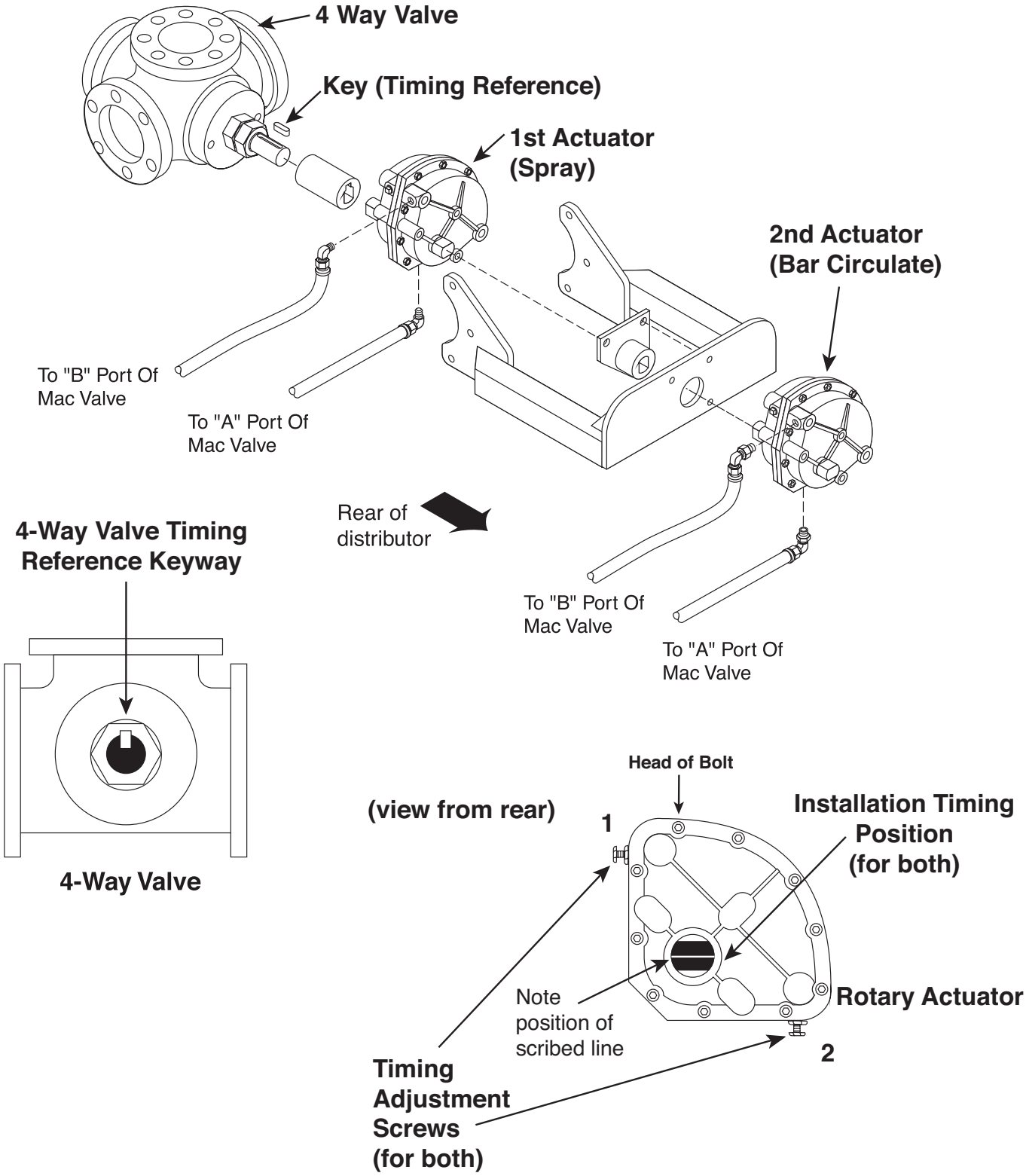

4-Way Valve Flow Positions

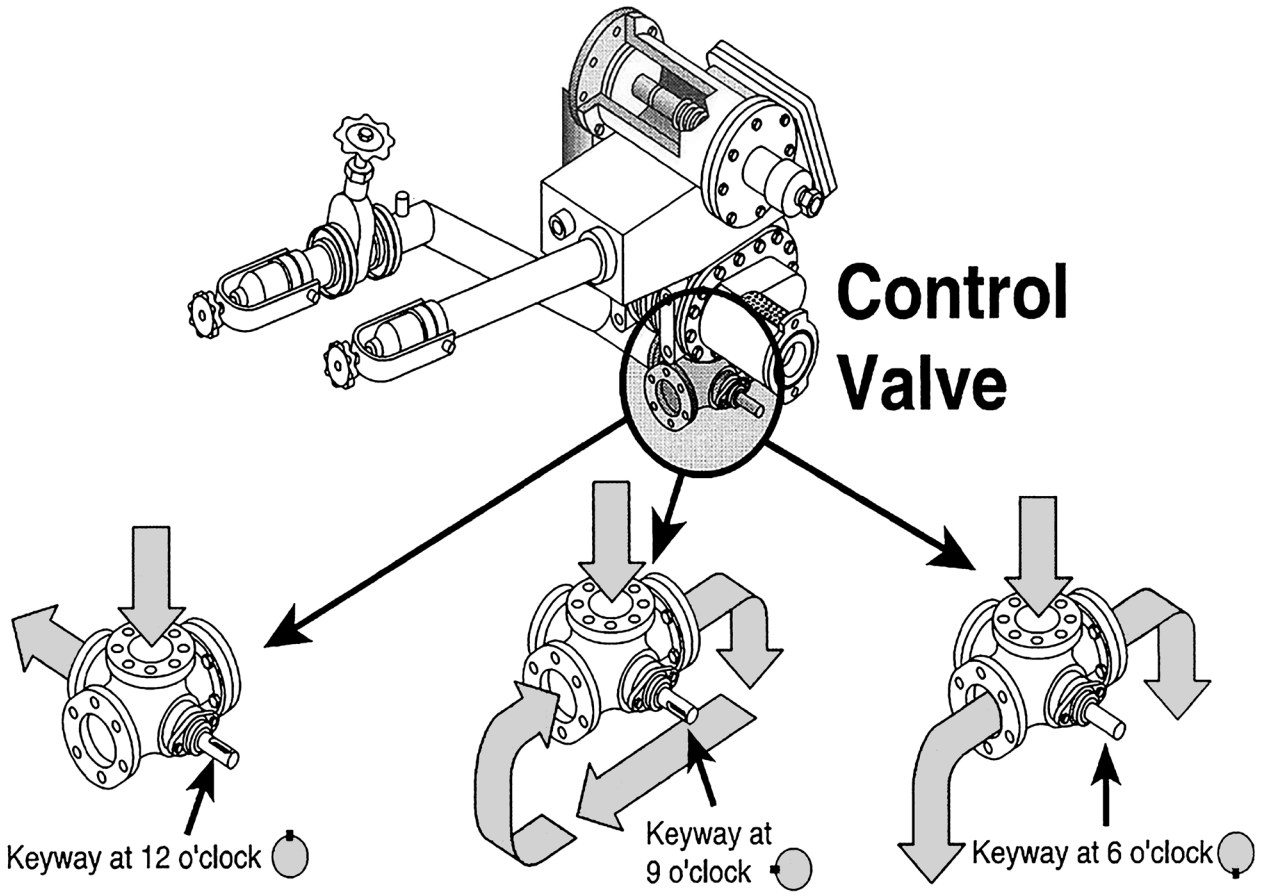

Tank Circulate
Load
Suck Back
Unload
Transfer
Handspray

Bar Circulate

Spray

Front Suction Valve Assembly

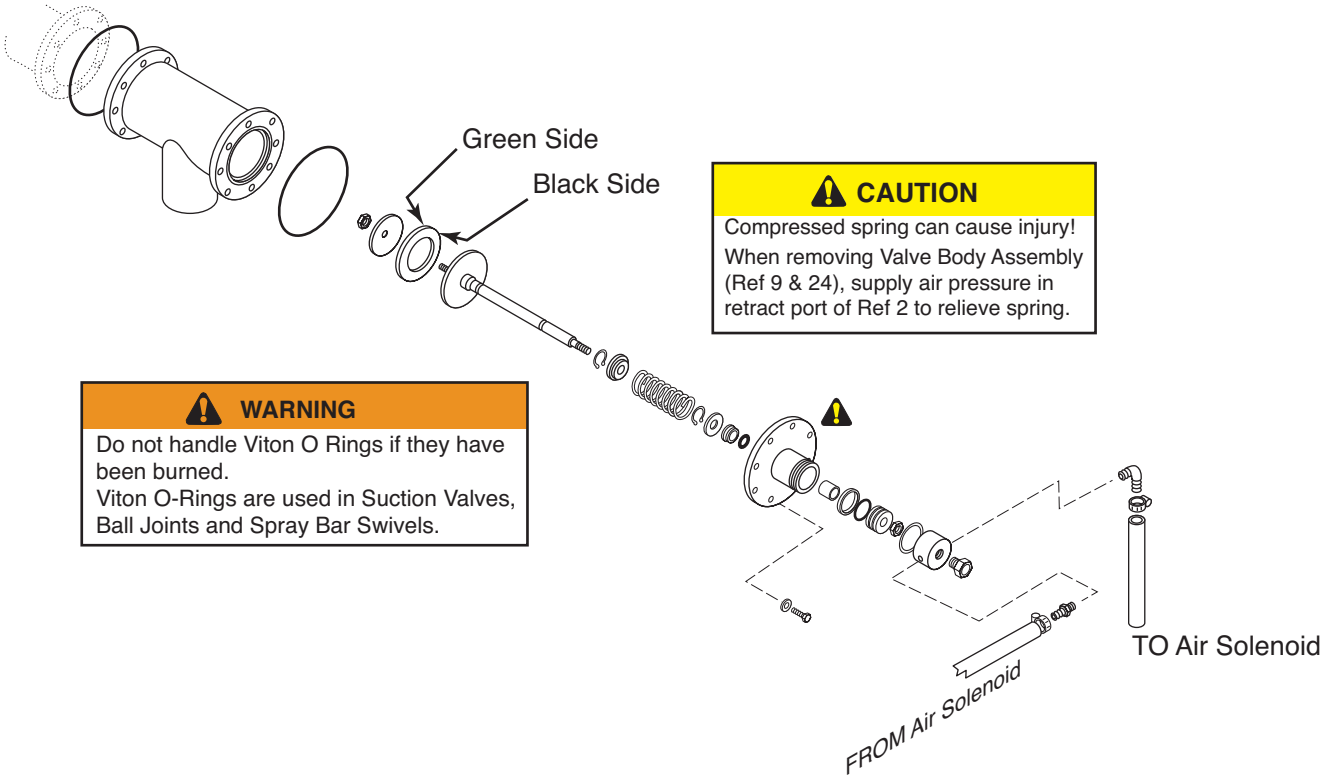

CAUTION

Compressed spring can cause injury!
When removing Valve Body Assembly (Ref 9 & 24), supply air pressure in retract port of Ref 2 to relieve spring.

WARNING

Do not handle Viton O Rings if they have been burned.
Viton O-Rings are used in Suction Valves, Ball Joints and Spray Bar Swivels.

Rear Suction Valve Assembly

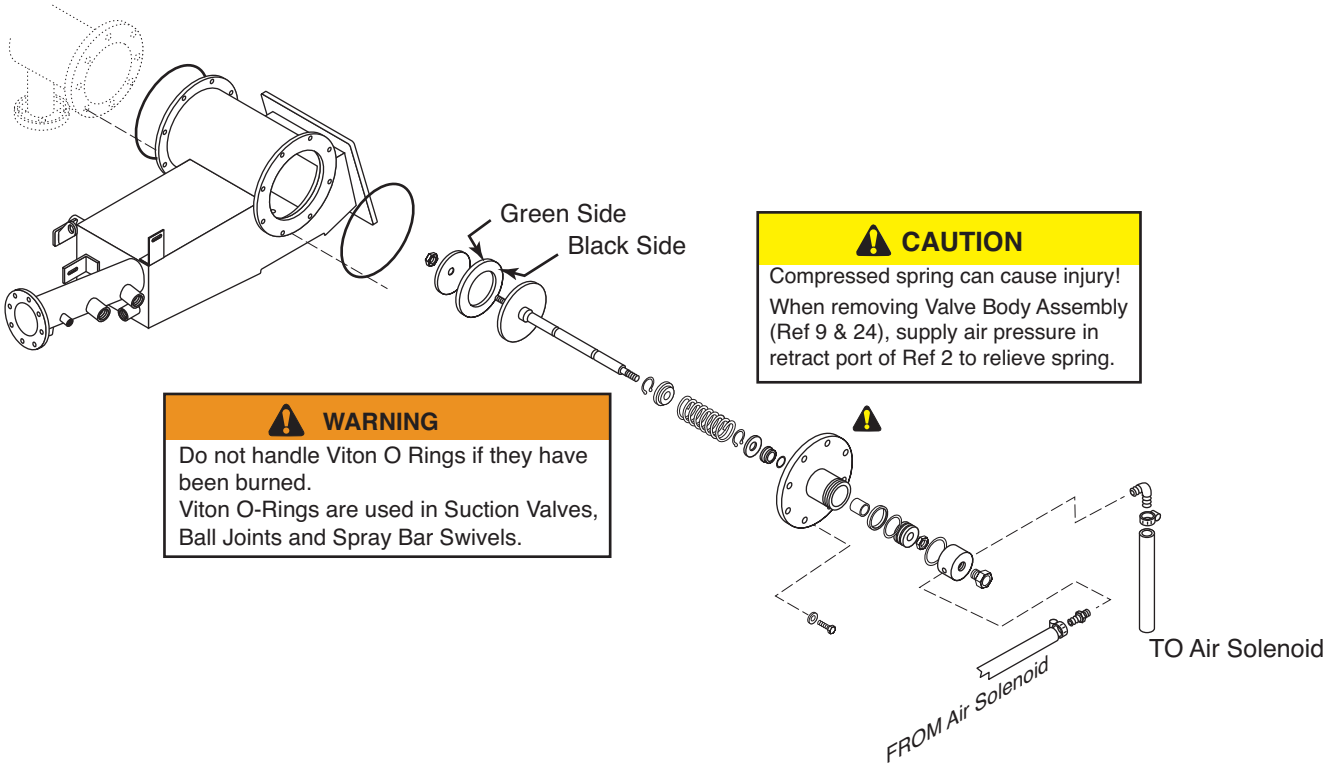

CAUTION

Compressed spring can cause injury!

When removing Valve Body Assembly (Ref 9 & 24), supply air pressure in retract port of Ref 2 to relieve spring.

WARNING

Do not handle Viton O Rings if they have been burned.

Viton O-Rings are used in Suction Valves, Ball Joints and Spray Bar Swivels.

Ball Joint Tightening and Locking

Clean oil from both the male and female threads.

Prime both threads with Loctite Primer "N" (Etnyre # 6800030).

Allow to dry for three to five minutes.

Apply four beads of Loctite "272" thread lock (Etnyre #6800047), about 1/8" wide, equally spaced, to the male threads as shown below.

Grease the ball liberally on the surface that contacts the case, o-ring and nut with chiksaw #11 high temperature grease. Tighten the nut until the o-ring is fully compressed and the free-play between the ball and the case is removed. The ball will be difficult to swivel in the case at this point. Back the nut off 1/4 turn to provide approximately .010" running clearance between metal plate.

Once the Loctite has cured, heating the joint will be required for disassembly.

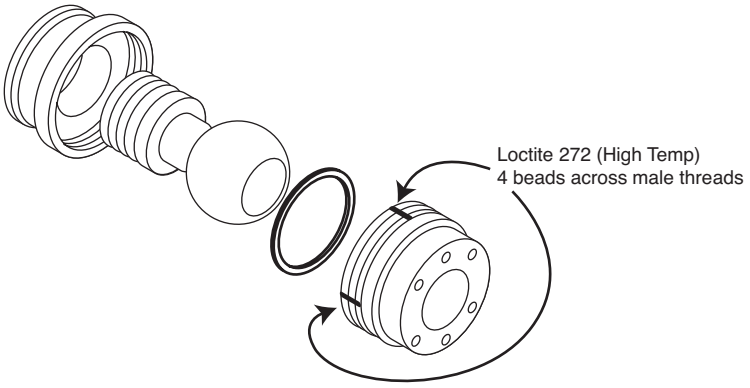

Ball Case Screw Tightening Procedure

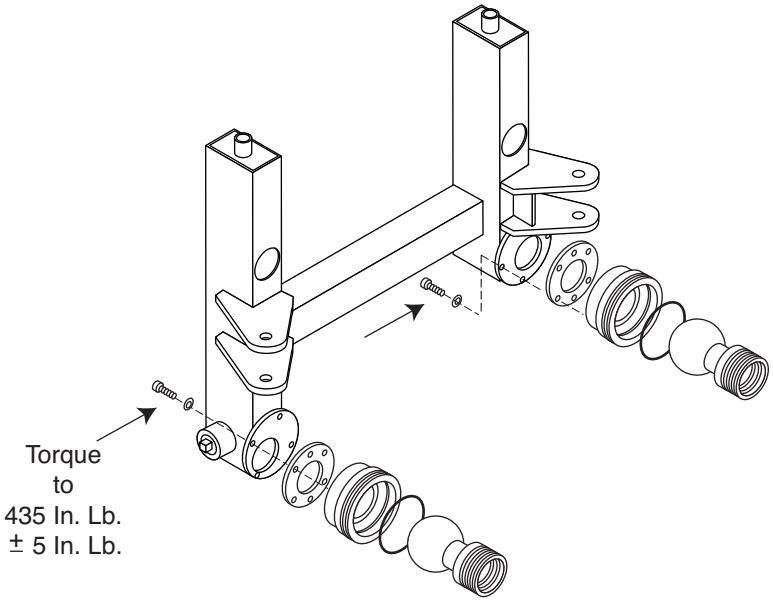

NOTE: Torque <u>All</u> Ball Case Screws to 435 In. Lb. ±5 In. Lb.

Swivel Joint

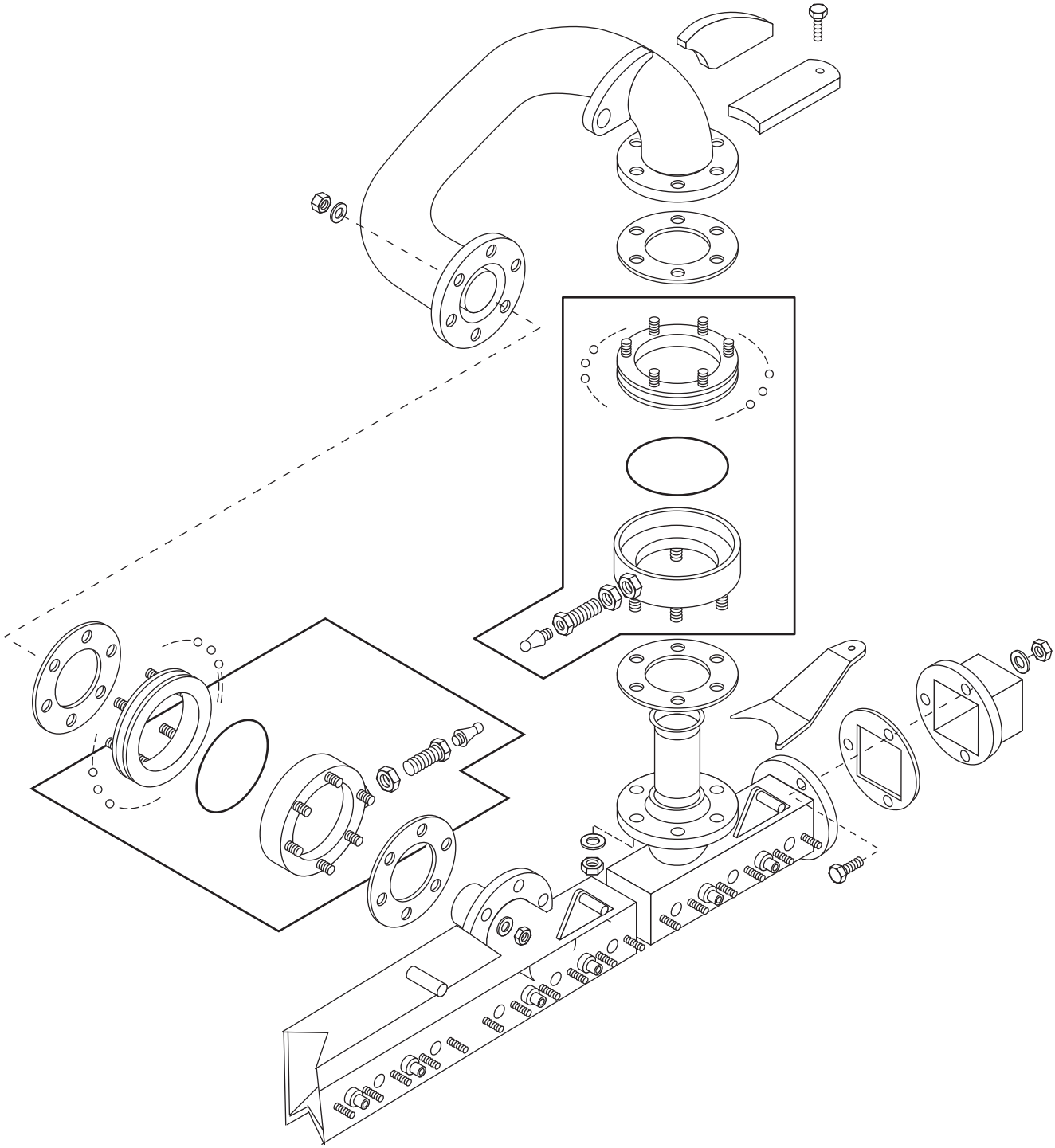

Solenoid Valves for Multifold Spraybars

Tri-fold Shown

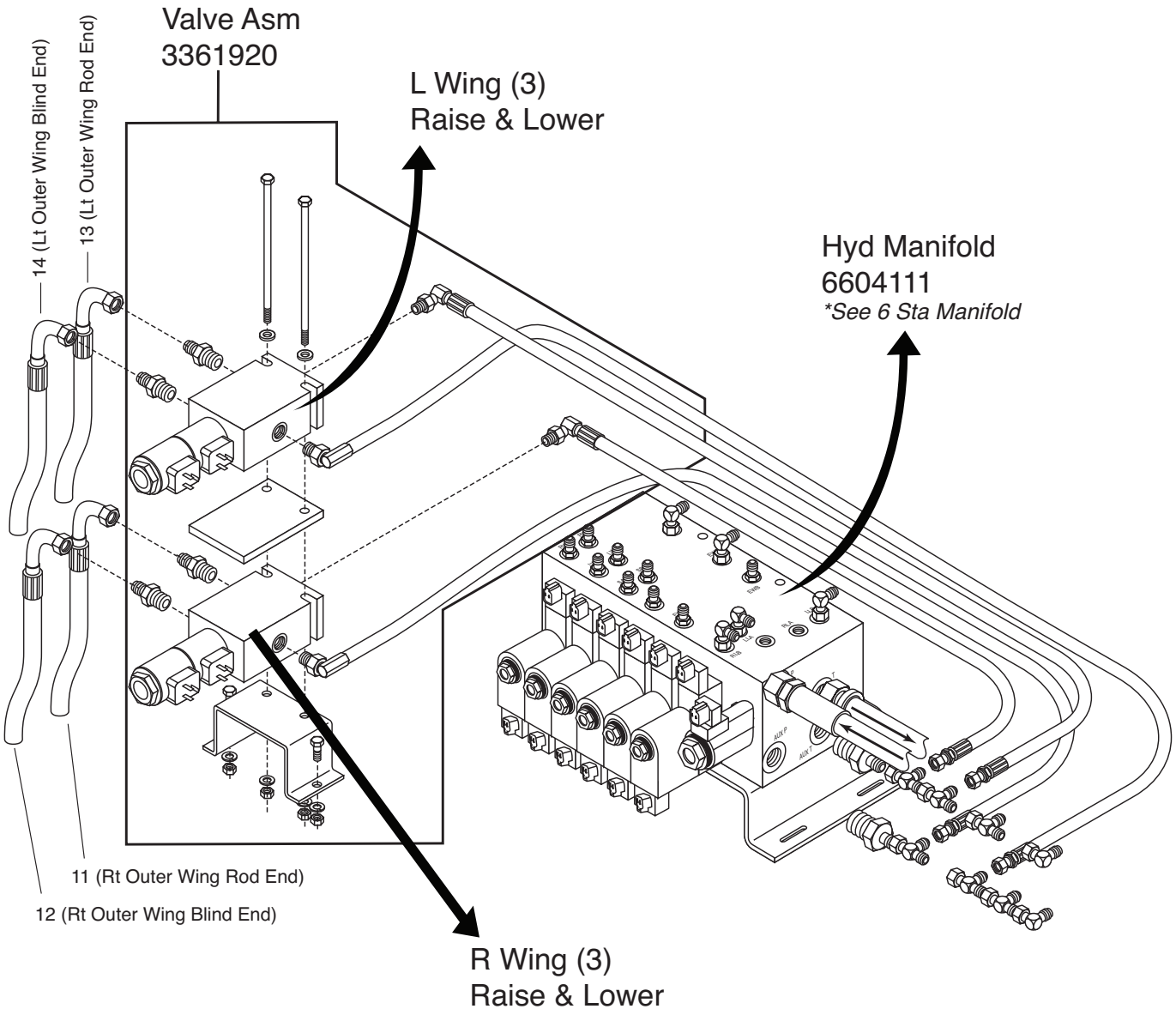

COMPONENT ILLUSTRATED BREAKDOWN INFO

Hydraulic Manifold Asm - Variable Width Spray Bar

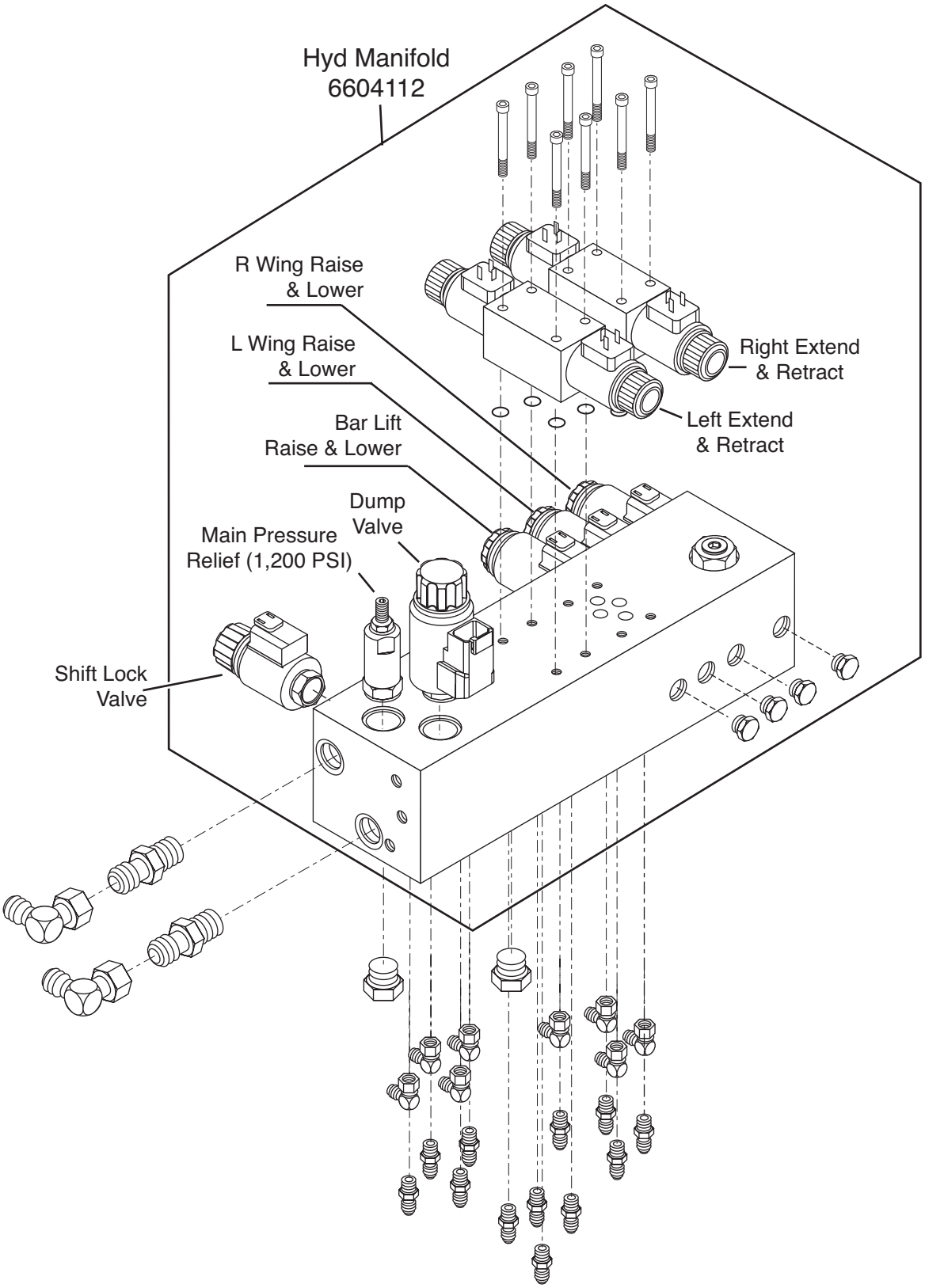

4 Station Manifold Assembly

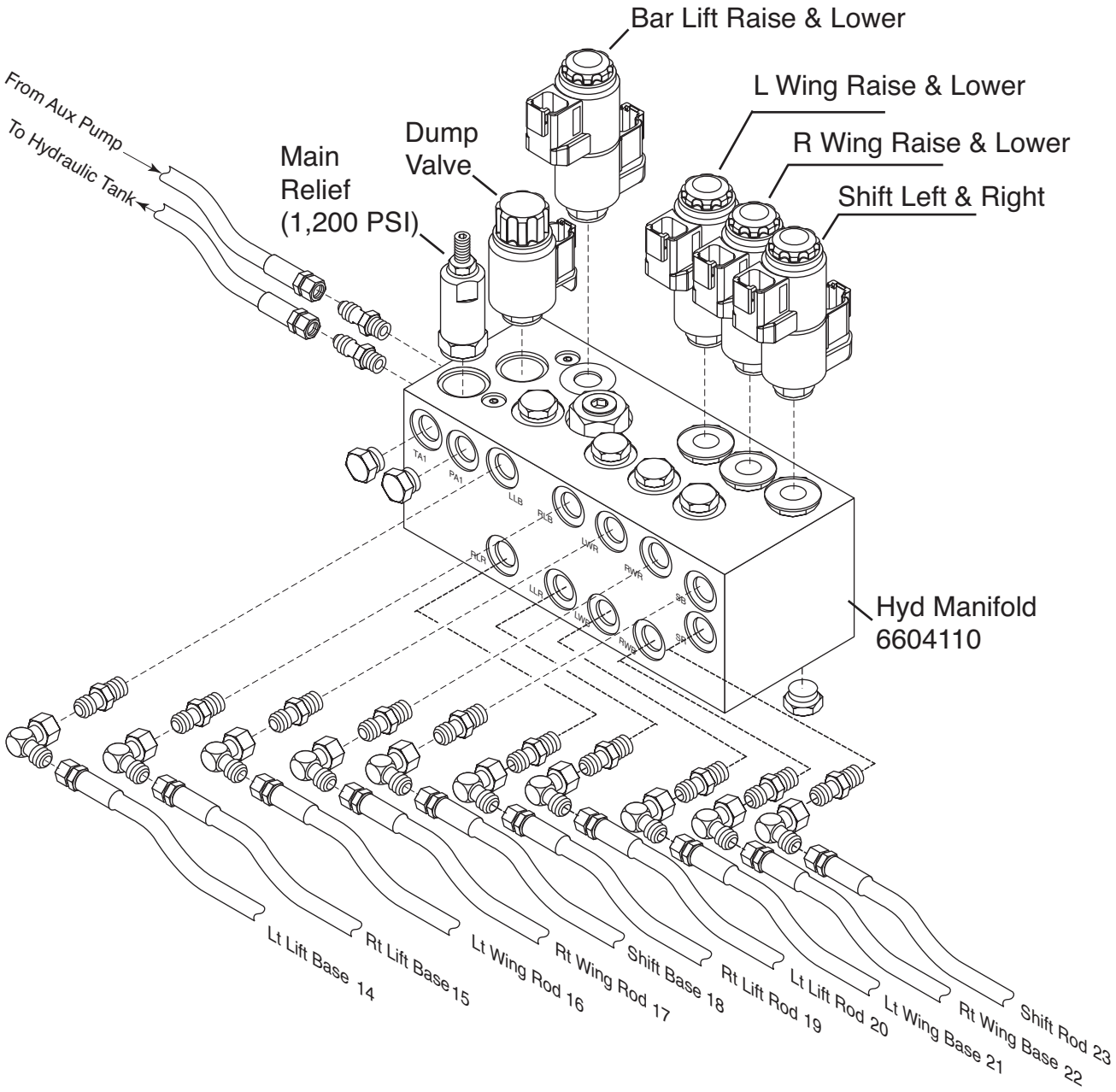

4 Station Heavy Duty Hydraulic Manifold

Used on 18 Ft & Longer Spraybars

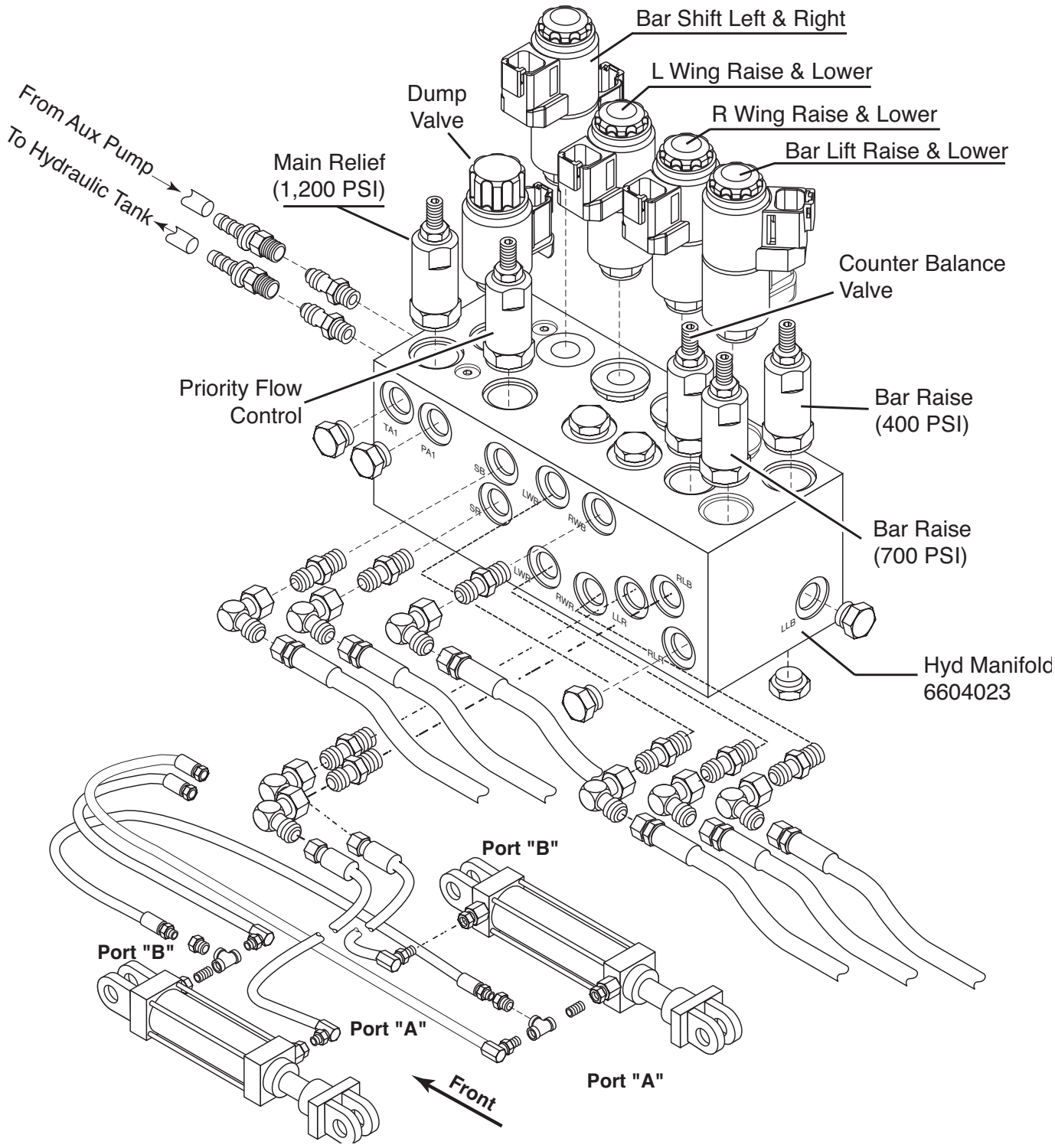

6 Station Manifold Assembly

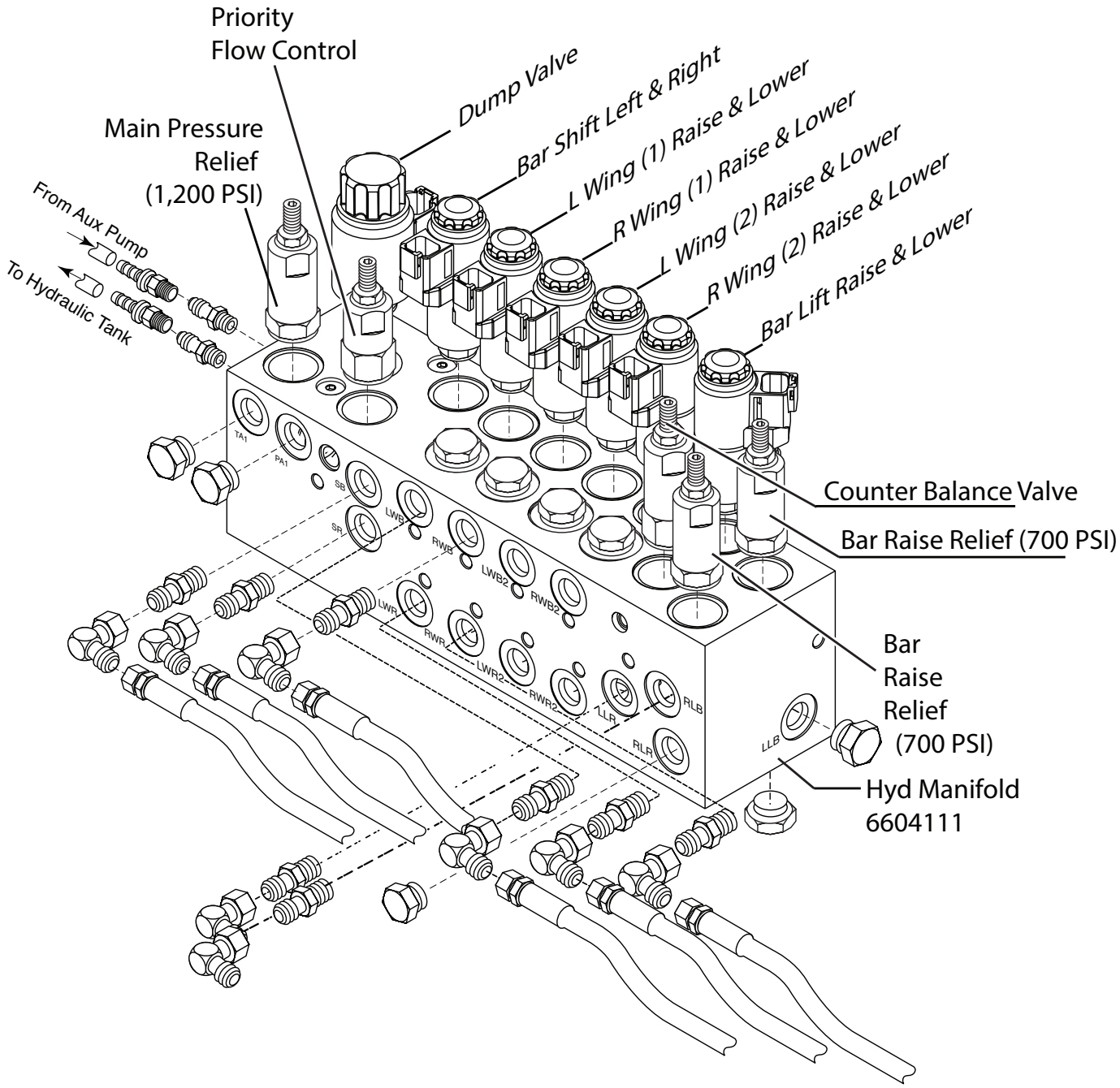

COMPONENT ILLUSTRATED BREAKDOWN INFO

Heavy Duty Bar Raise

w/ External Mounted Reliefs

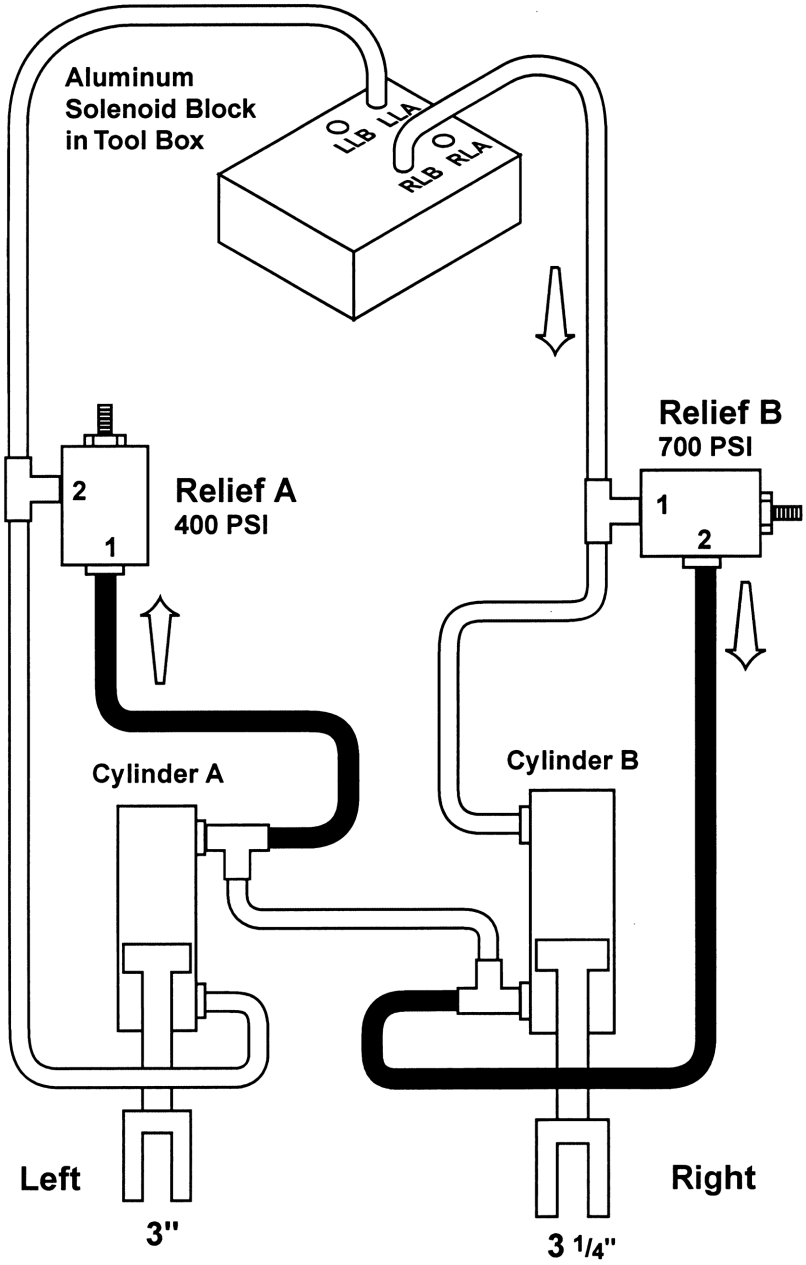

When lifting bars, if cylinder "B" bottoms before Cylinder "A", Relief "A" will pop taking pressure off of Cylinder "B". This will still move Cylinder "A".

When lowering bar, if Cylinder "B" bottoms before Cylinder "A", Relief "B" pops allowing flow to move Cylinder "A". If Cylinder "A" bottoms first, Relief "A" pops allowing Cylinder "B" to bottom out.

Bleeding Heavy Duty Spraybar Lift Cylinders

1. Make sure the spray bar is securely held in place with both of the bar latches.

2. Loosen the 1" nuts on the lower end of the Lug & Screw Asm (3311651) to relieve tension.

3. Remove the Lug & Screw Asm.

4. Remove the hydraulic cylinder, keeping the hoses attached.

5. Repeat steps 2 thru 4 for the other side.

6. Rotate both the right and left hydraulic cylinders so that they are sitting parallel with the ground and the hose ports are pointing straight up. The hoses will be the highest point on the cylinders.

7. With the truck engine running, use the rear control box to operate the bar lift switch. Hold the bar lift switch in the up position for one full minute, then hold the bar lift switch in the down position for one full minute. Repeat the process of cycling the cylinders for a total of three full times. This will force any air that is trapped inside the cylinders out through the manifold and into the hydraulic tank.

8. Replace both cylinders and Lug & Screw Asm.

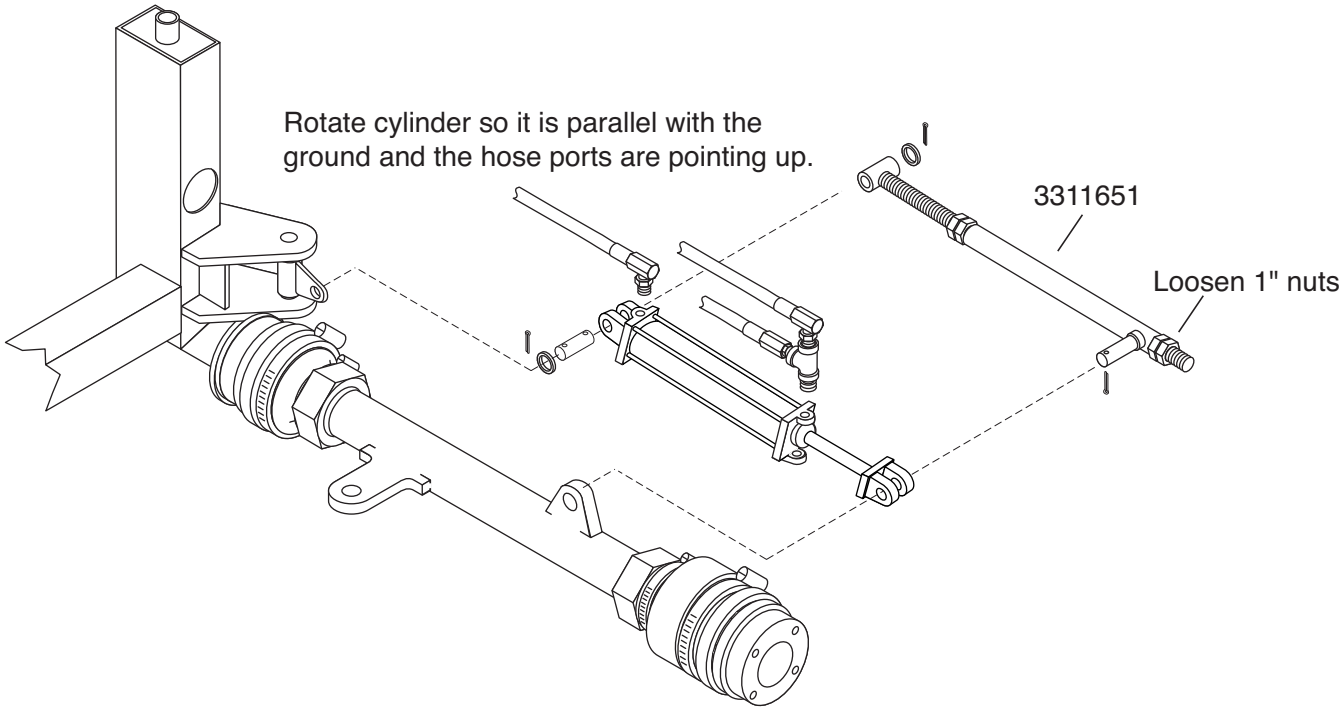

Air Supply - Standard Bar - 1Ft. Increments

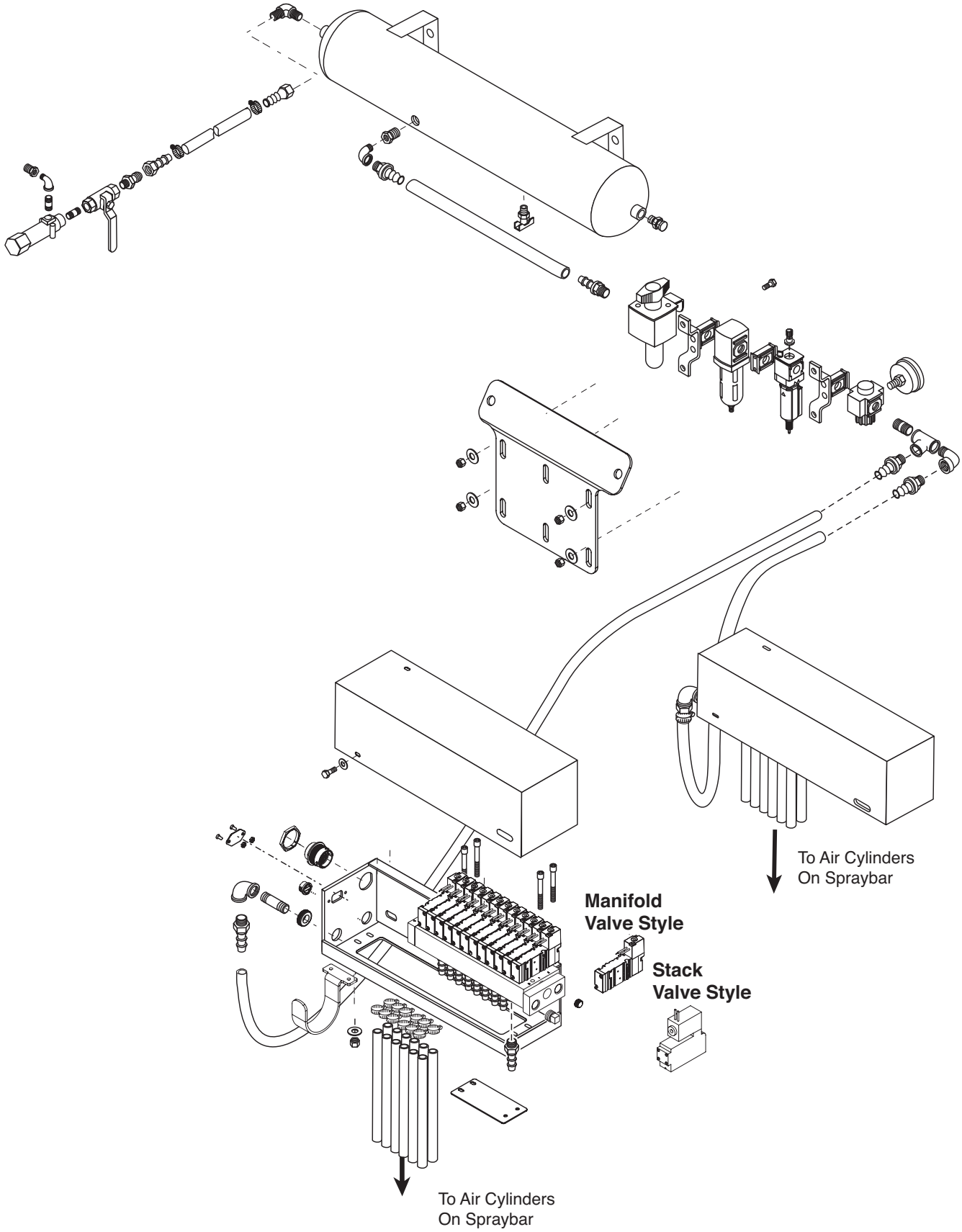

Tack Coat Valve - Variable Width Spray Bar

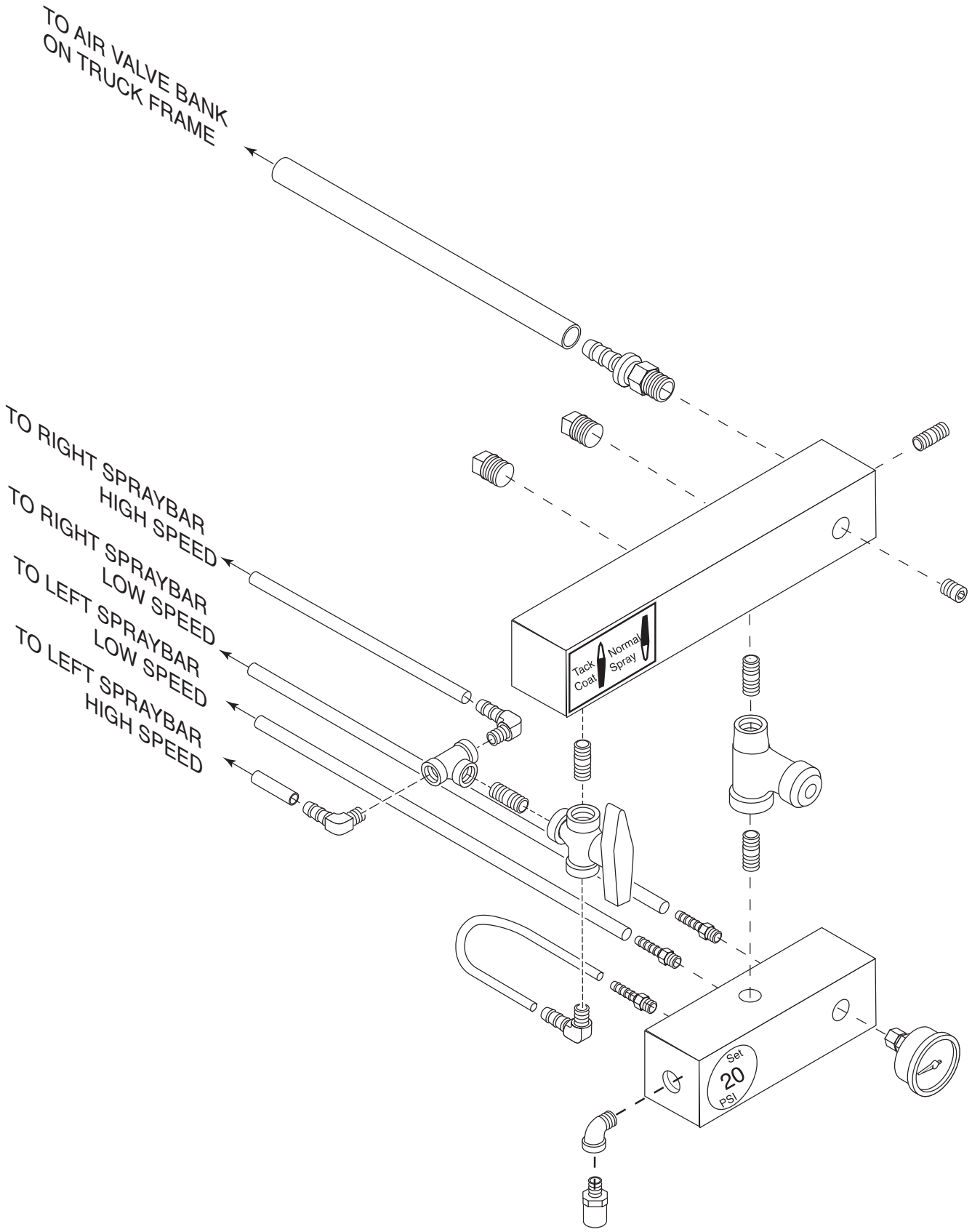

Air System - 4 Ft Wing - Variable Width Spray Bar

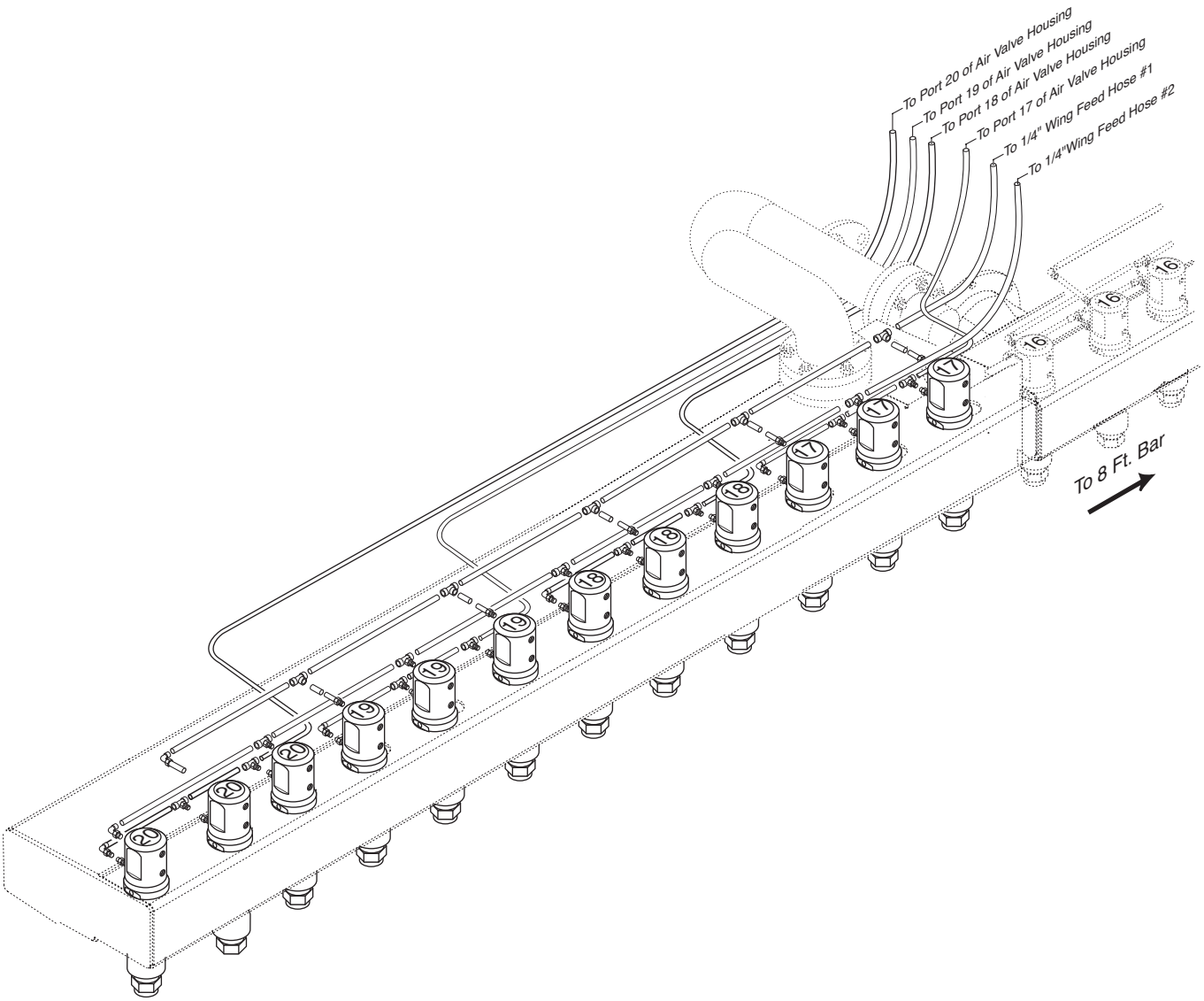

Air System - 8 Ft Bar - Variable Width Spray Bar

AIR LINE PLUMBING

Ports 1 through 12 go to first 12 individual valves on first 4 feet of bar
Ports 13 through 20 go to 3 valves each (1 ft of bar) for feet 5 through 12

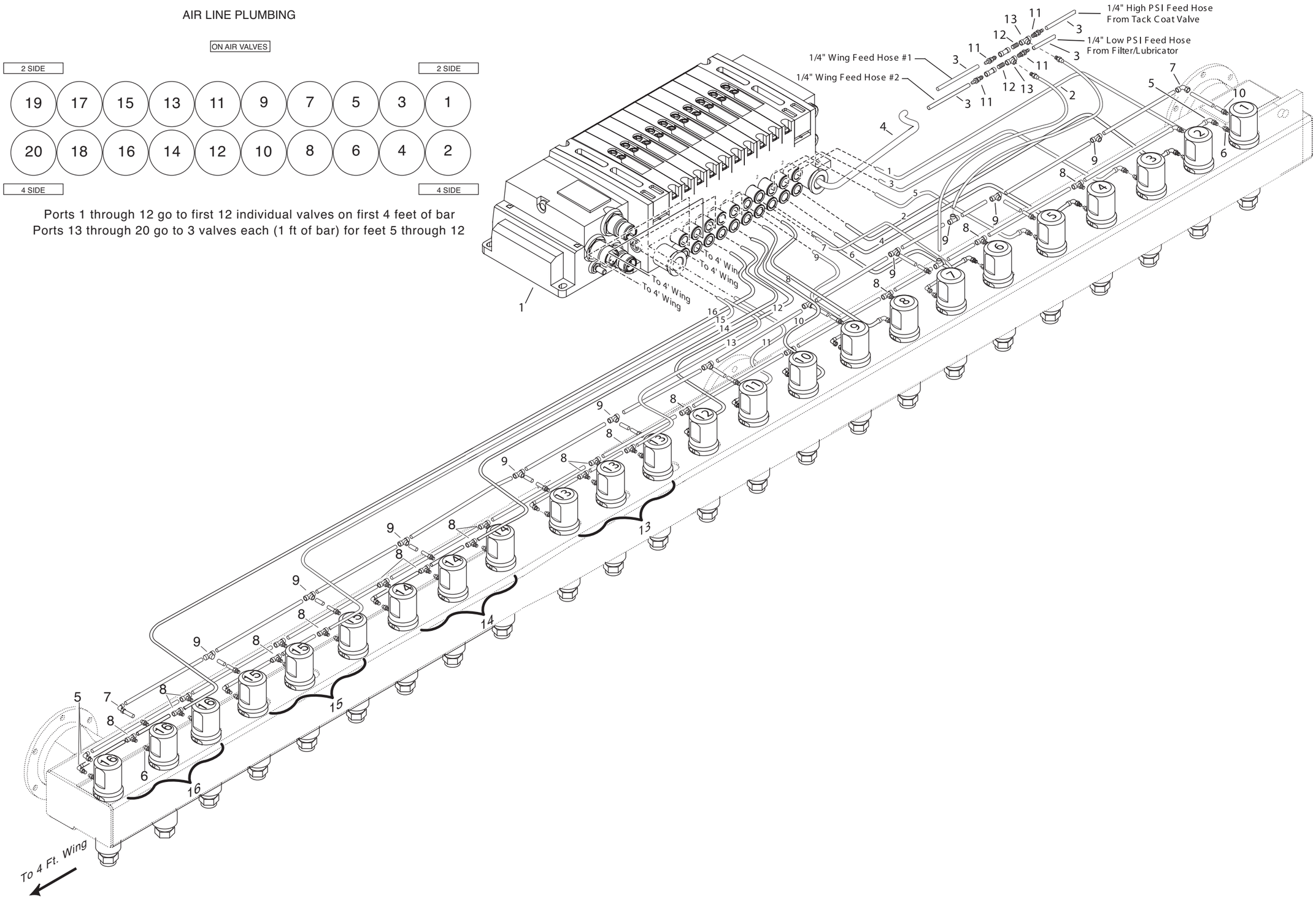

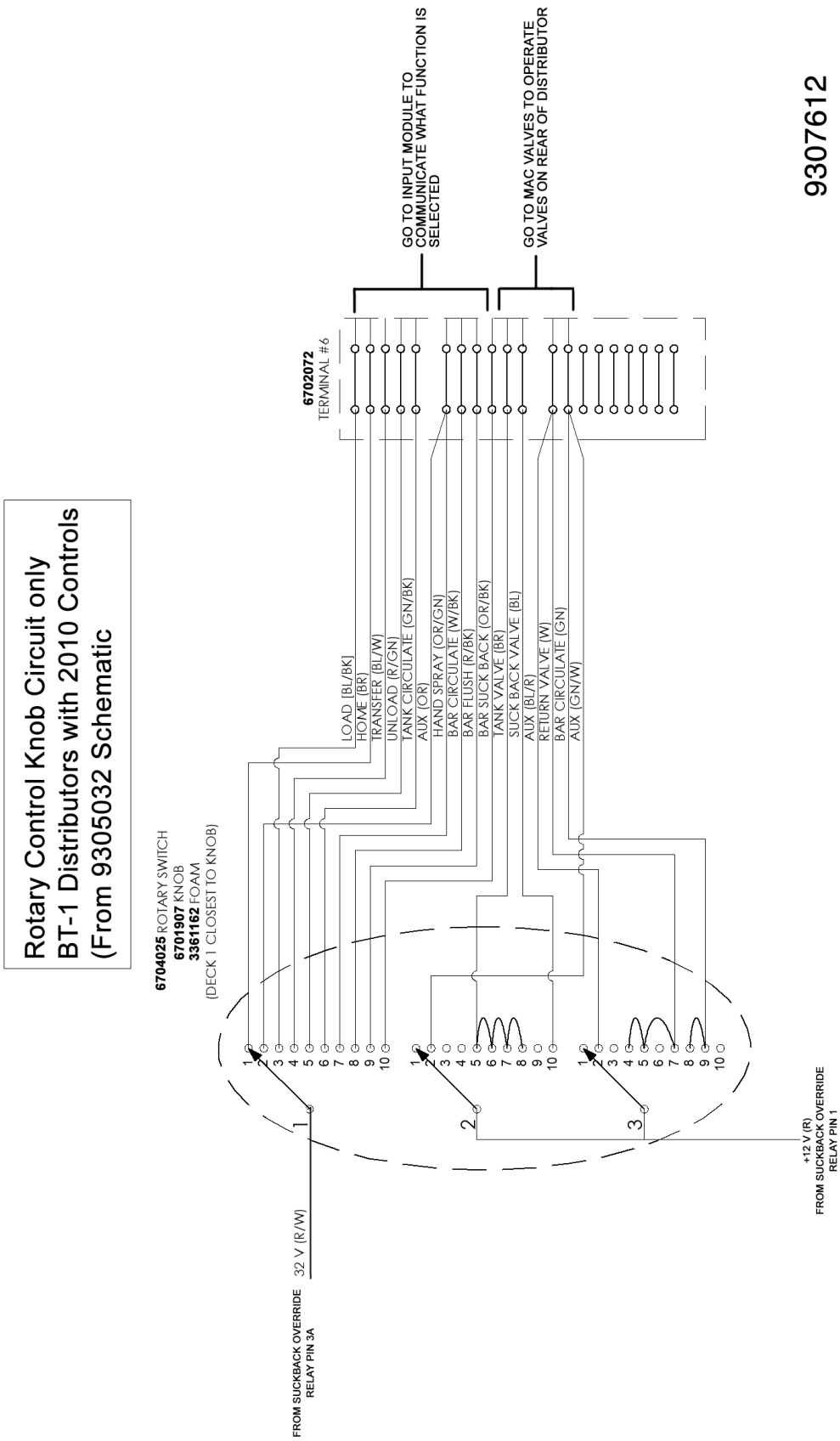
Rotary Control Knob Circuit only
BT-1 Distributors with 2010 Controls
(From 9305032 Schematic
6704025 ROTARY SWITCH
6701907 KNOB
3361162 FOAM
(DECK 1 CLOSEST TO KNOB)
6702072
TERMINAL #6
GO TO INPUT MODULE TO COMMUNICATE WHAT FUNCTION IS SELECTED
GO TO MAC VALVES TO OPERATE VALVES ON REAR OF DISTRIBUTOR
9307612
LOAD (BL/BK)
HOME (BR)
TRANSFER (BL/W)
UNLOAD (R/GN)
TANK CIRCULATE (GN/BK)
AUX (OR)
HAND SPRAY (OR/GN)
BAR CIRCULATE (W/BK)
BAR FLUSH (R/BK)
BAR SUCK BACK (OR/BK)
TANK VALVE (BR)
SUCK BACK VALVE (BL)
AUX (BL/R)
RETURN VALVE (W)
BAR CIRCULATE (GN)
AUX (GN/W)
FROM SUCKBACK OVERRIDE RELAY PIN 3A
32 V (R/W)
+12 V (R)
FROM SUCKBACK OVERRIDE RELAY PIN 1

Rotary Control Knob Circuit only
BT-1 Distributors with 2008 Controls
(From 9304309 Schematic

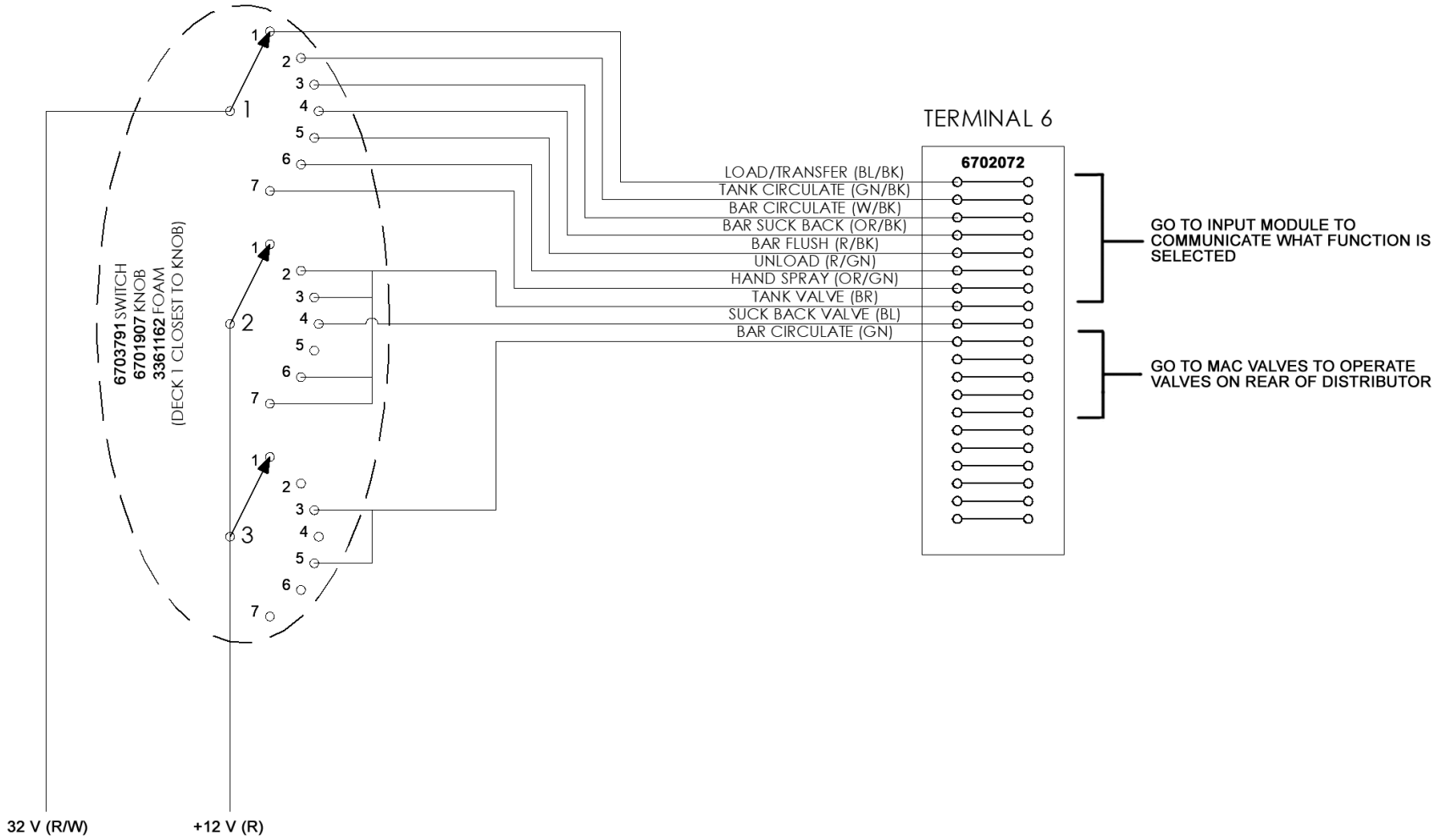

9307613

Pump Control Circuit only / BT-1 Distributors with 2016 Controls (From 9306498 Schematic)

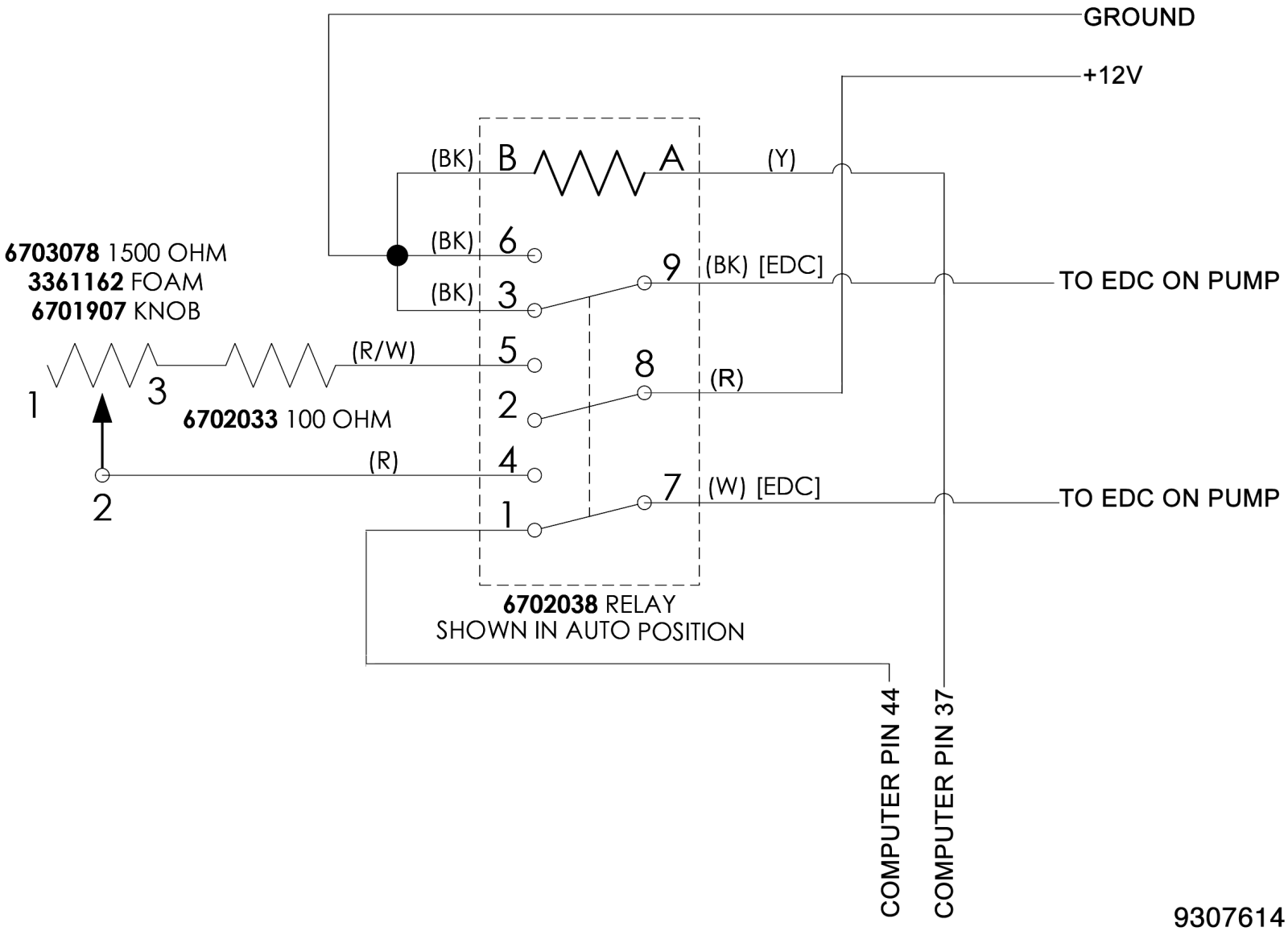

9307614

Pump Control Circuit only / BT-1 Distributors with 2010 Controls (From 9305032 Schematic)

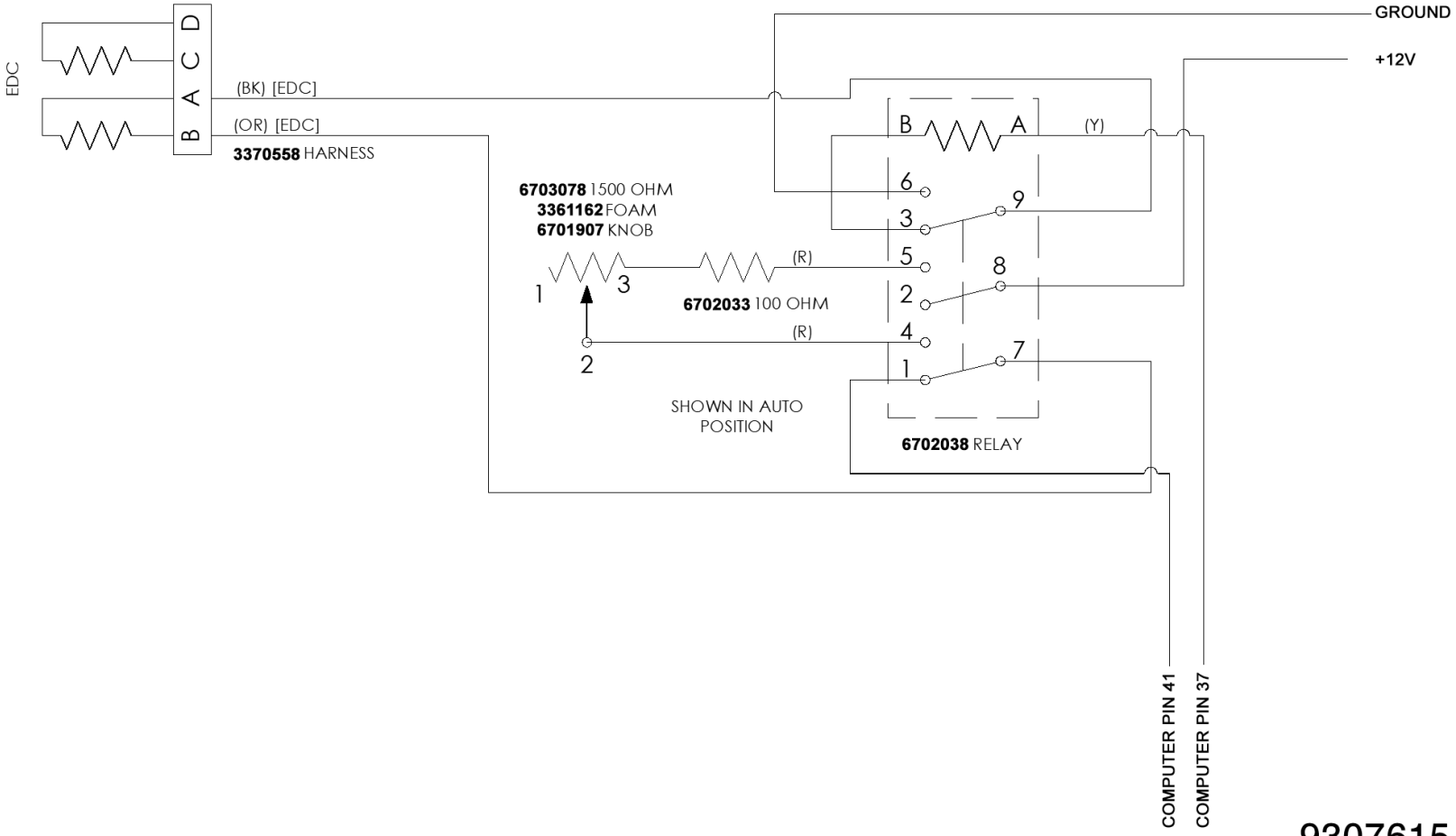

9307615

Pump Control Circuit only / BT-1 Distributors with 2008 Controls (From 9304309 Schematic)

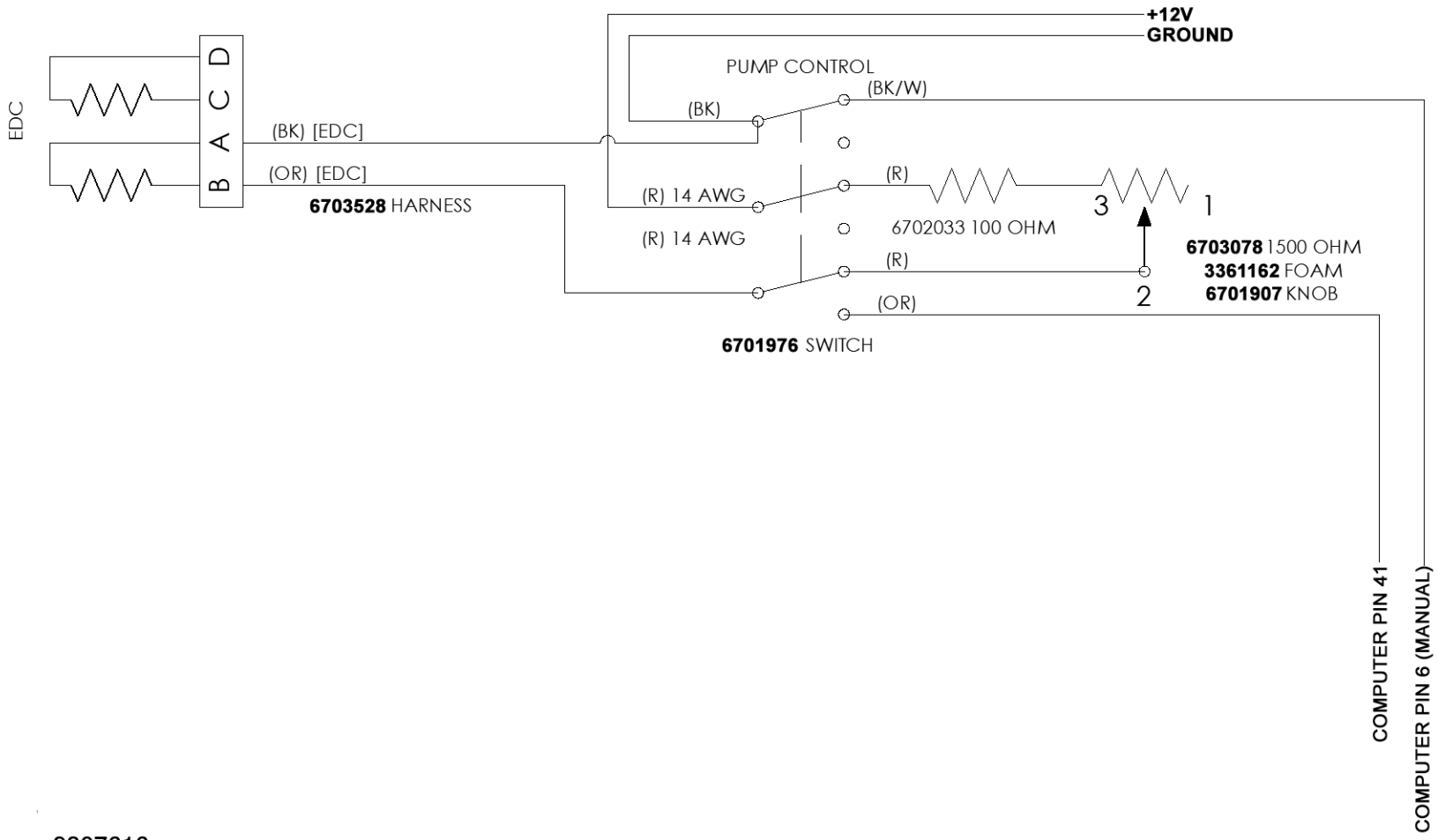

9307616

STANDARD BAR W/ 1FT CONTROLS

MASTER SPRAY SWITCH

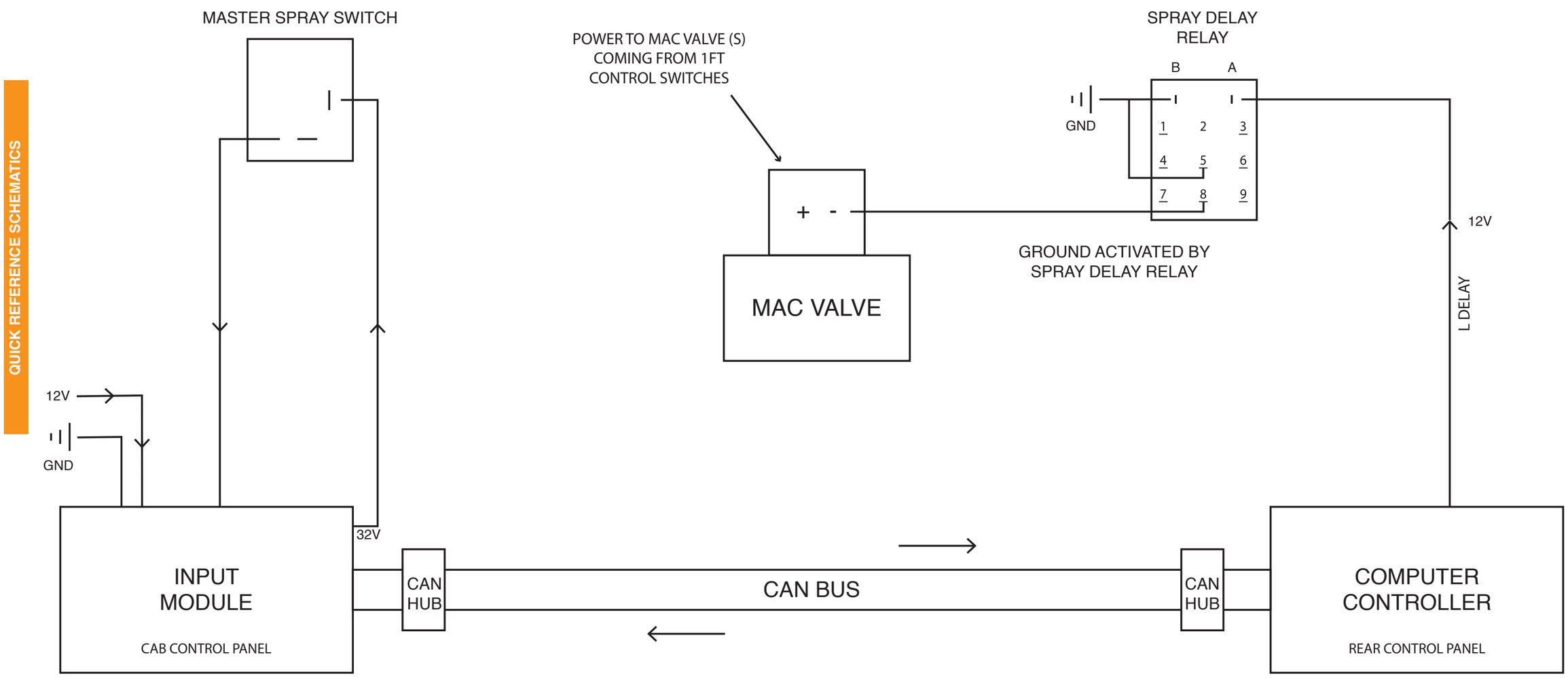

*THIS IS FOR QUICK REFERENCE USE ONLY / PLEASE REFER TO PROPER SCHEMATIC FOR SERIAL # OF UNIT

9307468

1FT CONTROL SWITCH
STANDARD BAR WITH 1FT CONTROLS

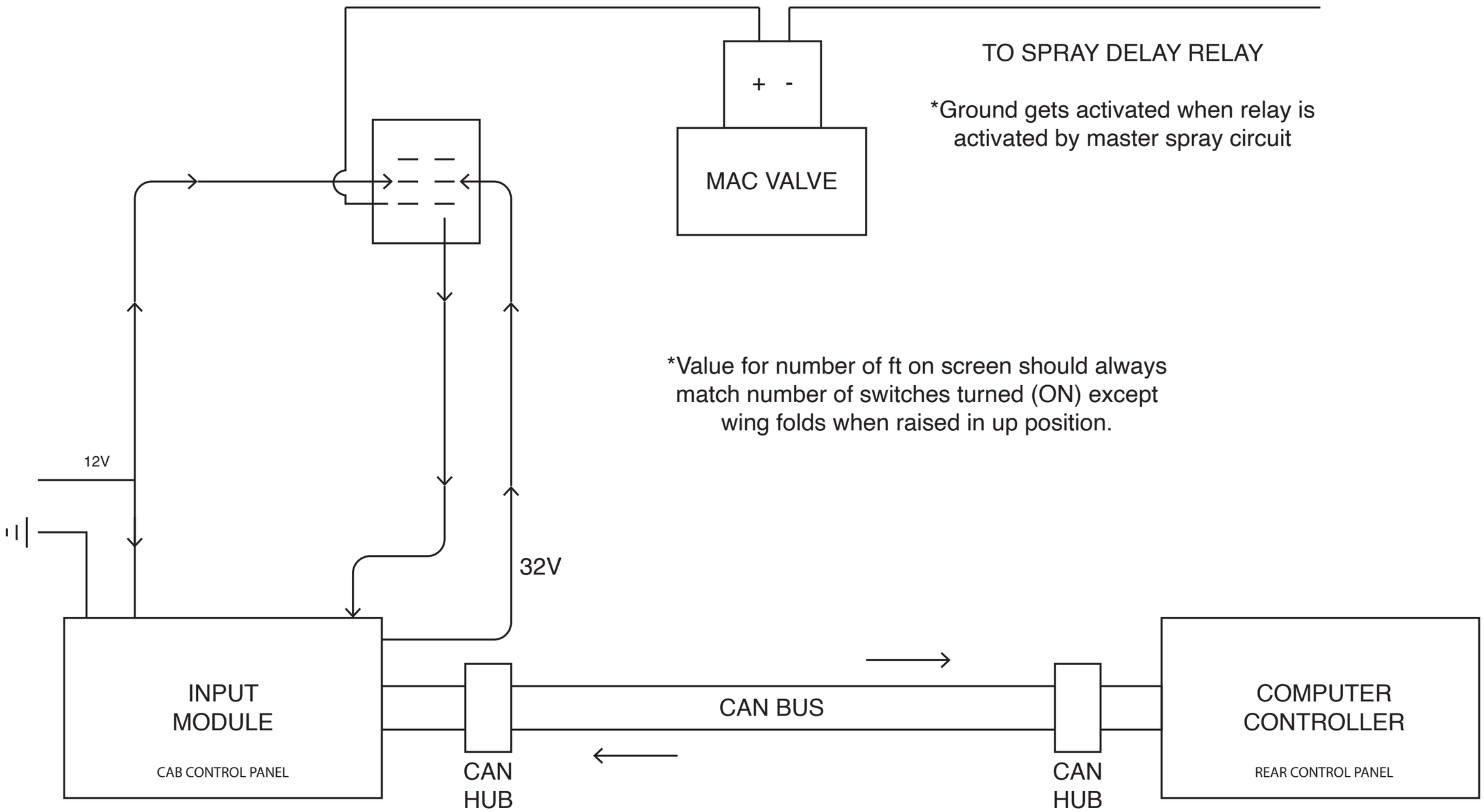

*THIS IS FOR QUICK REFERENCE USE ONLY / PLEASE REFER TO PROPER SCHEMATIC FOR SERIAL # OF UNIT

VARIABLE WIDTH DISTRIBUTOR WITH AVENTICS VALVES

1 FT CONTROL SWITCH

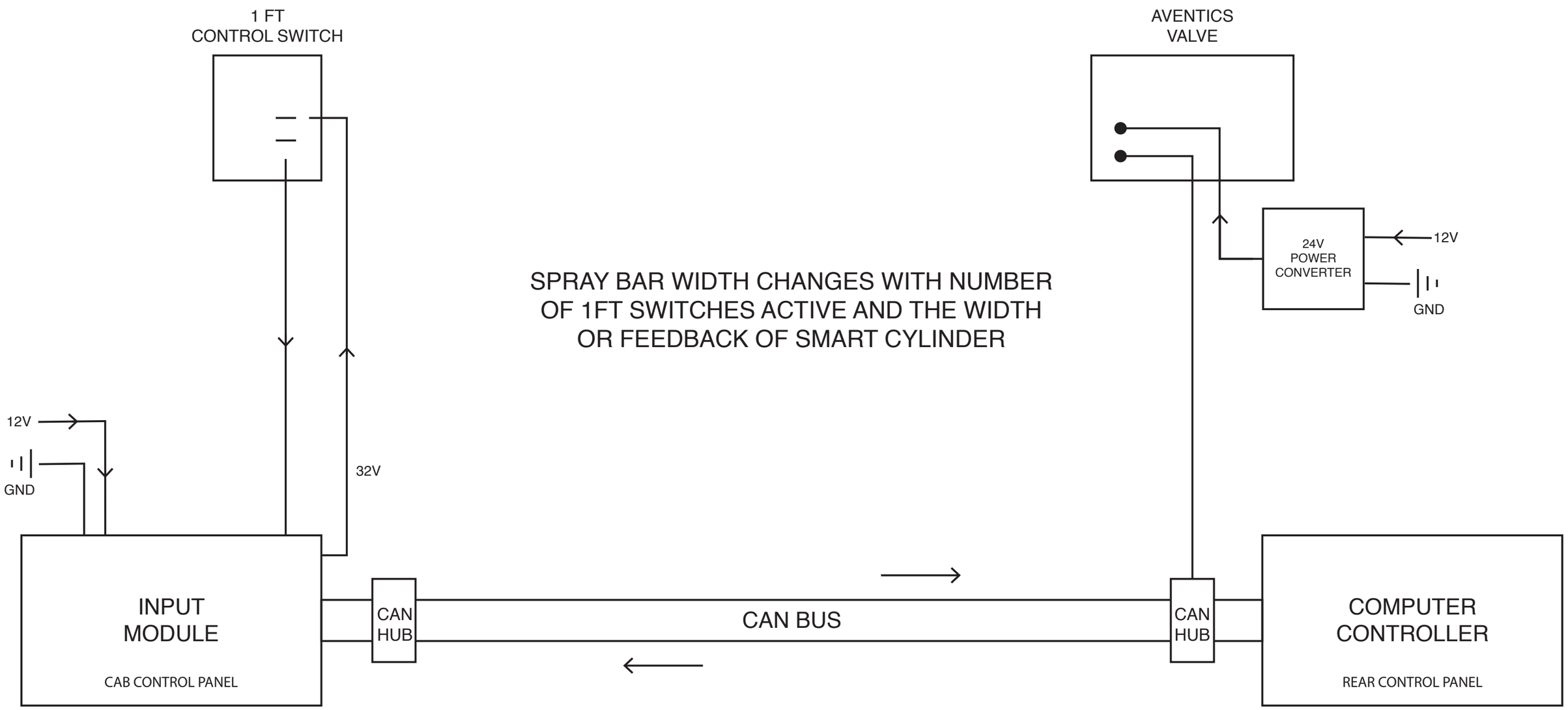

*THIS IS FOR QUICK REFERENCE USE ONLY / PLEASE REFER TO PROPER SCHEMATIC FOR SERIAL # OF UNIT

9307470

VARIABLE WIDTH DISTRIBUTOR WITH AVENTICS VALVES

MASTER SPRAY SWITCH

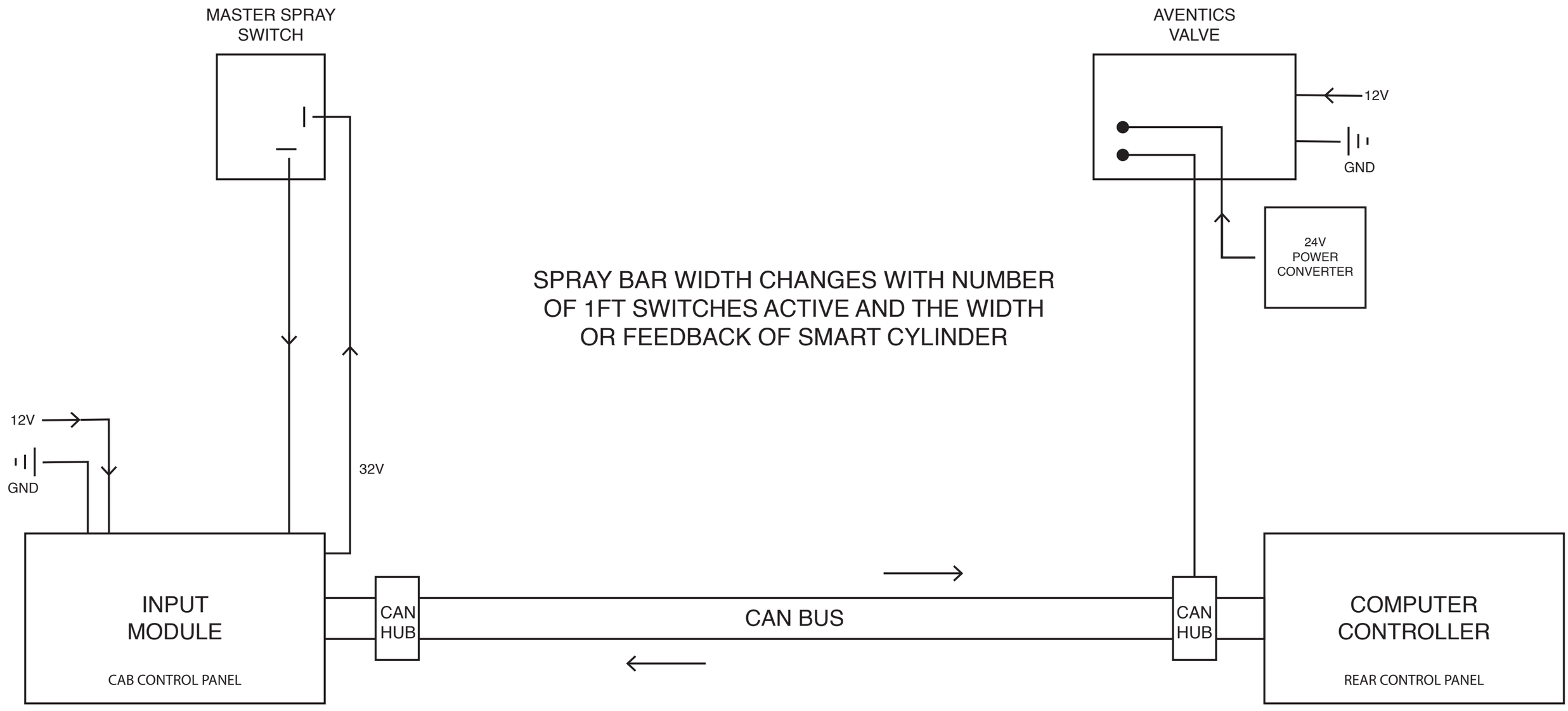

*THIS IS FOR QUICK REFERENCE USE ONLY / PLEASE REFER TO PROPER SCHEMATIC FOR SERIAL # OF UNIT

DISTRIBUTOR COMMUNICATION HIGHWAY

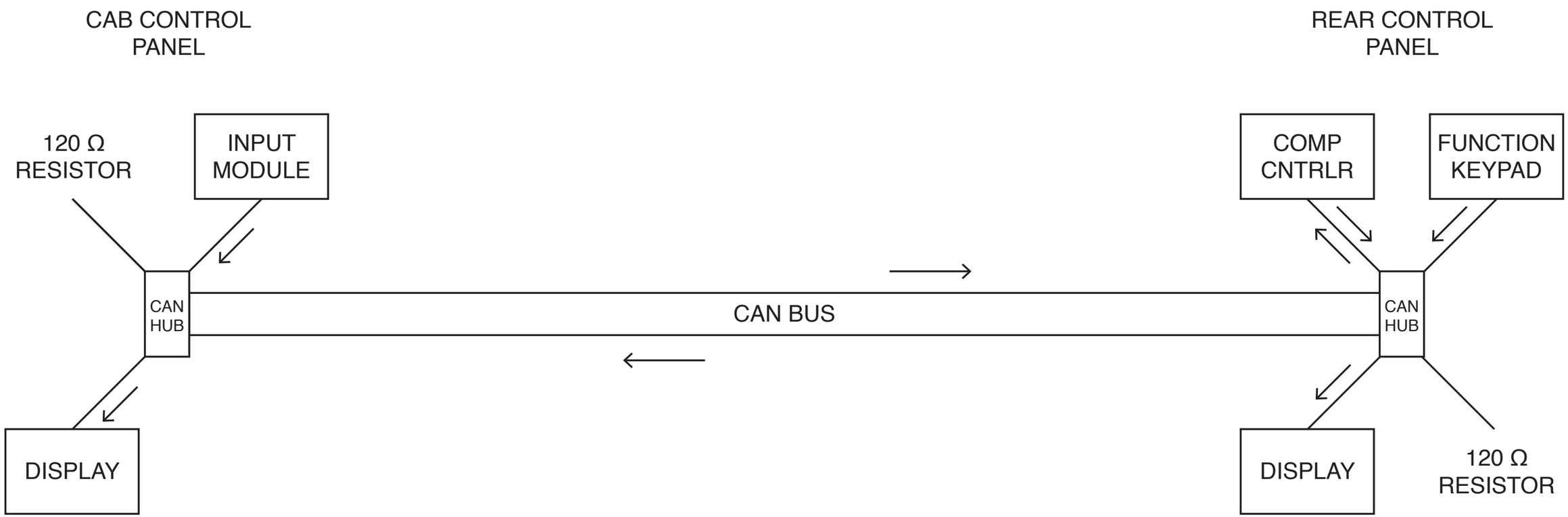

*THIS IS FOR QUICK REFERENCE USE ONLY / PLEASE REFER TO PROPER SCHEMATIC FOR SERIAL # OF UNIT

9307472

FUNCTION CONTROL KNOB
(BT-1 2008)

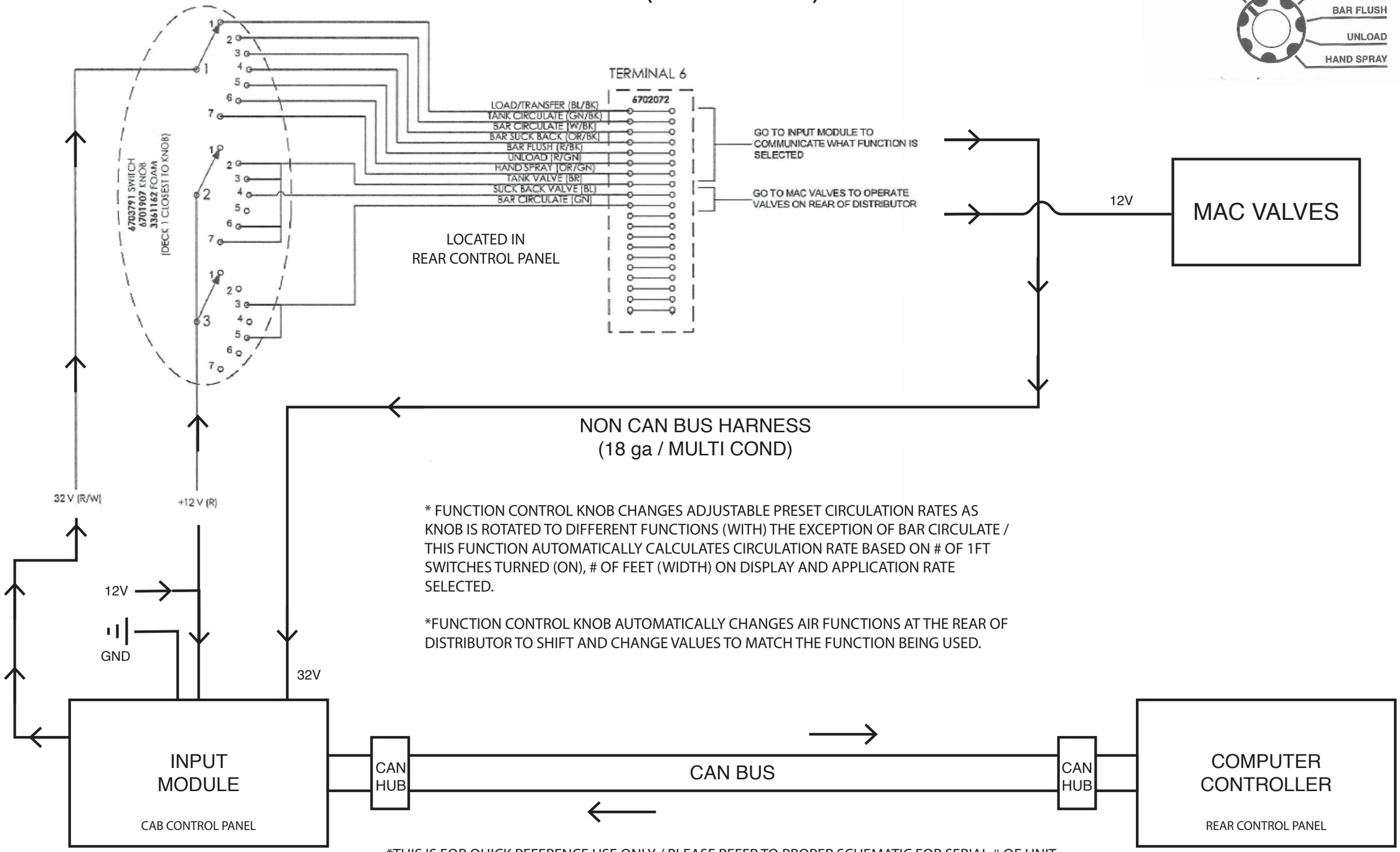

* FUNCTION CONTROL KNOB CHANGES ADJUSTABLE PRESET CIRCULATION RATES AS KNOB IS ROTATED TO DIFFERENT FUNCTIONS (WITH) THE EXCEPTION OF BAR CIRCULATE / THIS FUNCTION AUTOMATICALLY CALCULATES CIRCULATION RATE BASED ON # OF 1FT SWITCHES TURNED (ON), # OF FEET (WIDTH) ON DISPLAY AND APPLICATION RATE SELECTED.

*FUNCTION CONTROL KNOB AUTOMATICALLY CHANGES AIR FUNCTIONS AT THE REAR OF DISTRIBUTOR TO SHIFT AND CHANGE VALUES TO MATCH THE FUNCTION BEING USED.

*THIS IS FOR QUICK REFERENCE USE ONLY / PLEASE REFER TO PROPER SCHEMATIC FOR SERIAL # OF UNIT

FUNCTION CONTROL KNOB
(BT-1 2010)

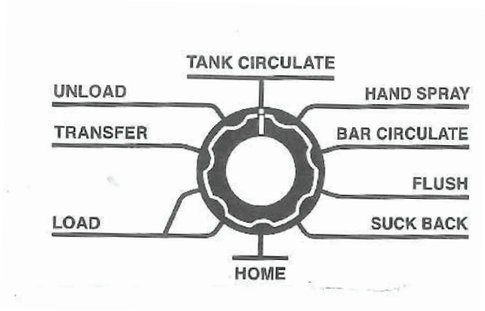

6704025 ROTARY SWITCH
6701907 KNOB
3361162 FOAM
(DECK 1 CLOSEST TO KNOB)

FROM SUCKBACK OVERRIDE RELAY PIN 3 — 32 V (R/W)

LOAD (BL/BK)
HOME (BR)
TRANSFER (BL/W)
UNLOAD (R/GN)
TANK CIRCULATE (GN/BK)
AUX (OR)
HAND SPRAY (OR/GN)
BAR CIRCULATE (W/BK)
BAR FLUSH (R/BK)
BAR SUCK BACK (OR/BK)
TANK VALVE (BR)
SUCK BACK VALVE (BL)
AUX (BL/R)
RETURN VALVE (W)
BAR CIRCULATE (GN)
AUX (GN/W)

6702072
TERMINAL #6

GO TO INPUT MODULE TO COMMUNICATE WHAT FUNCTION IS SELECTED

GO TO MAC VALVES TO OPERATE VALVES ON REAR OF DISTRIBUTOR

12V

MAC VALVES

LOCATED IN
REAR CONTROL PANEL

SBO
RELAY

+12 V (R)
FROM SUCKBACK OVERRIDE RELAY PIN 1

NON CAN BUS HARNESS

(18 ga / MULTI COND)

32V

12V

GND

32V

* FUNCTION CONTROL KNOB CHANGES ADJUSTABLE PRESET CIRCULATION RATES AS KNOB IS ROTATED TO DIFFERENT FUNCTIONS (WITH) THE EXCEPTION OF BAR CIRCULATE / THIS FUNCTION AUTOMATICALLY CALCULATES CIRCULATION RATE BASED ON # OF 1FT SWITCHES TURNED (ON), # OF FEET (WIDTH) ON DISPLAY AND APPLICATION RATE SELECTED.

*FUNCTION CONTROL KNOB AUTOMATICALLY CHANGES AIR FUNCTIONS AT THE REAR OF DISTRIBUTOR TO SHIFT AND CHANGE VALUES TO MATCH THE FUNCTION BEING USED.

INPUT MODULE
CAB CONTROL PANEL

CAN HUB

CAN BUS

CAN HUB

COMPUTER CONTROLLER
REAR CONTROL PANEL

*THIS IS FOR QUICK REFERENCE USE ONLY / PLEASE REFER TO PROPER SCHEMATIC FOR SERIAL # OF UNIT

FUNCTION KEYPAD
BT-1 (2017 & NEWER)

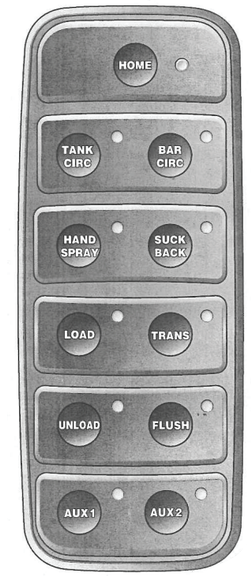

* FUNCTION KEYPAD CHANGES ADJUSTABLE PRESET CIRCULATION RATES AS BUTTONS ARE PUSHED (WITH) THE EXCEPTION OF BAR CIRCULATE / THIS FUNCTION AUTOMATICALLY CALCULATES CIRCULATION RATE BASED ON # OF 1FT SWITCHES TURNED (ON) # OF FEET (WIDTH) ON DISPLAY, AND APPLICATION RATE SELECTED

* FUNCTION KEYPAD AUTOMATICALLY CHANGES AIR FUNCTIONS AT THE REAR OF DISTRIBUTOR TO SHIFT AND CHANGE VALVES TO MATCH THE FUNCTION BEING USED.

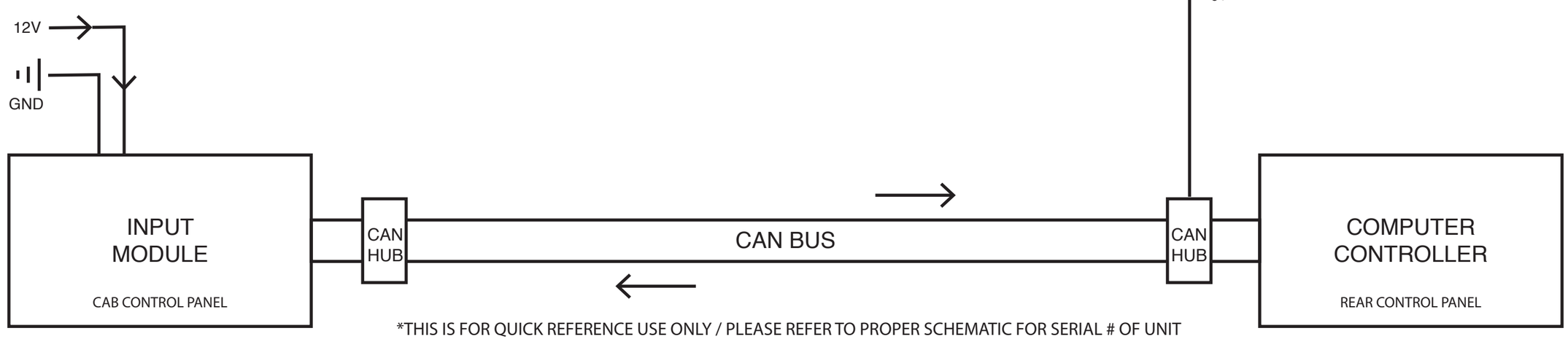

*THIS IS FOR QUICK REFERENCE USE ONLY / PLEASE REFER TO PROPER SCHEMATIC FOR SERIAL # OF UNIT

9307475

SWITCHES @ CAB CONTROL PANEL

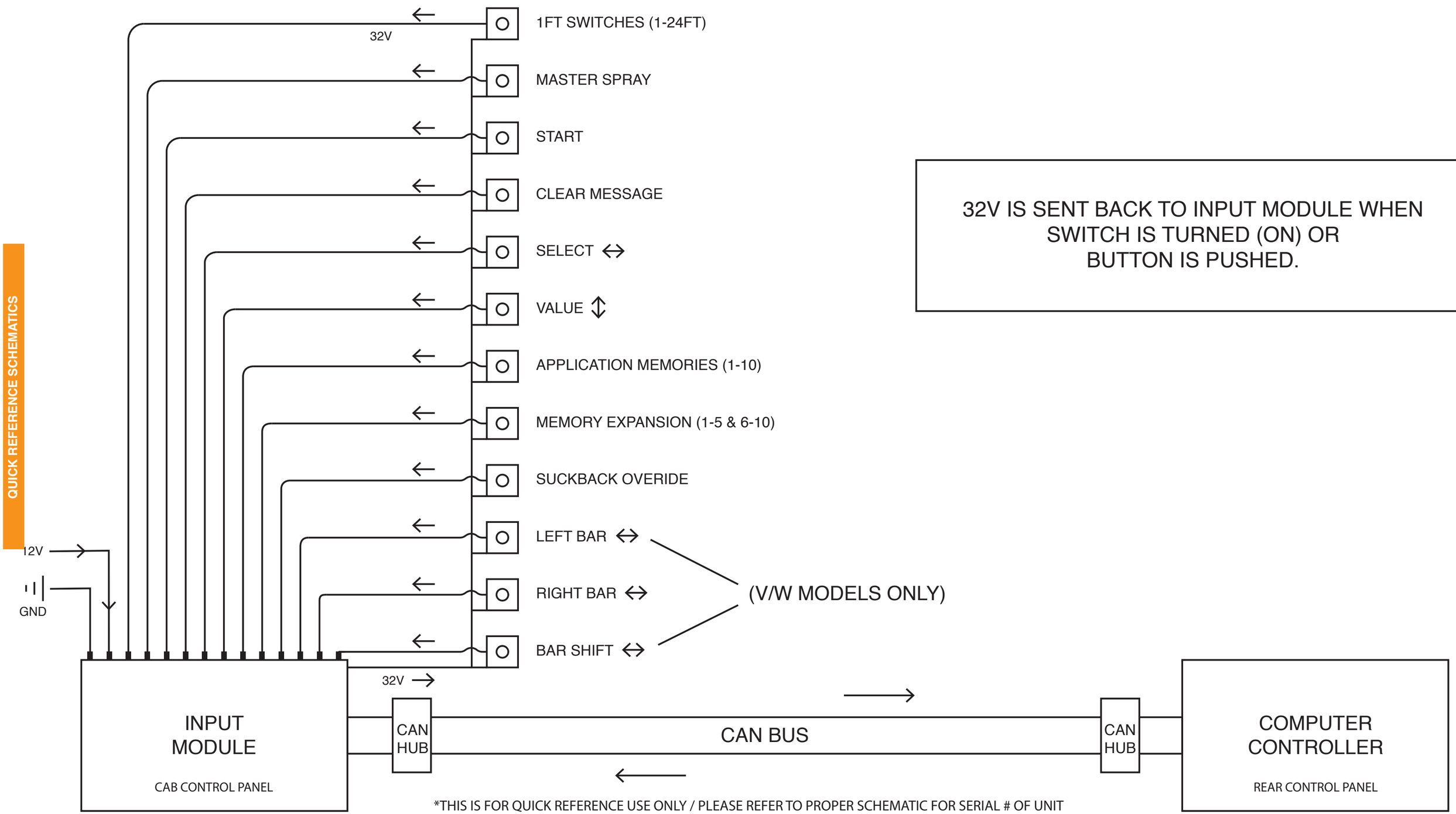

32V IS SENT BACK TO INPUT MODULE WHEN SWITCH IS TURNED (ON) OR BUTTON IS PUSHED.

*THIS IS FOR QUICK REFERENCE USE ONLY / PLEASE REFER TO PROPER SCHEMATIC FOR SERIAL # OF UNIT

9307476

SWITCHES @ REAR CONTROL PANEL

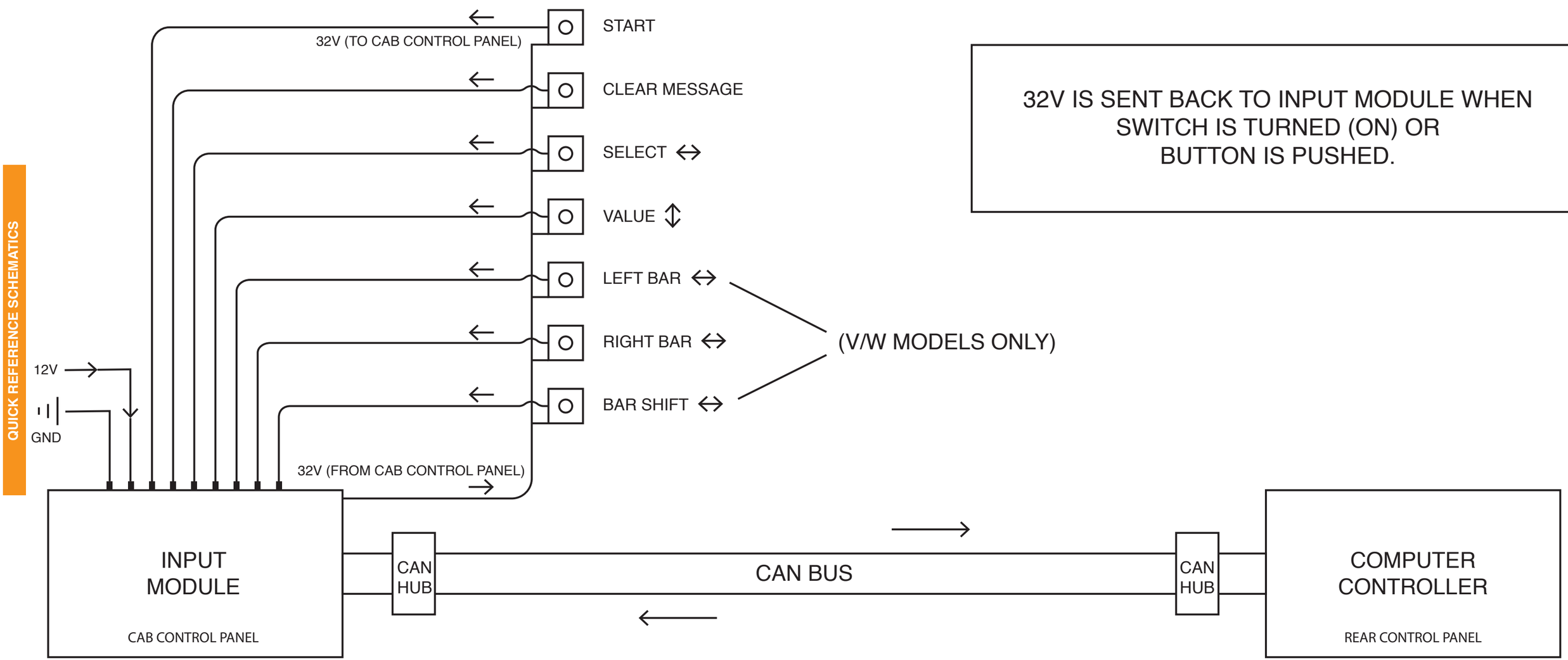

32V IS SENT BACK TO INPUT MODULE WHEN SWITCH IS TURNED (ON) OR BUTTON IS PUSHED.

*THIS IS FOR QUICK REFERENCE USE ONLY / PLEASE REFER TO PROPER SCHEMATIC FOR SERIAL # OF UNIT

9307477

Tilt Switch Kits

7051608 - Tilt Switch Field Retro Kit

7051819 - tilt Switch Complete Rewire Kit

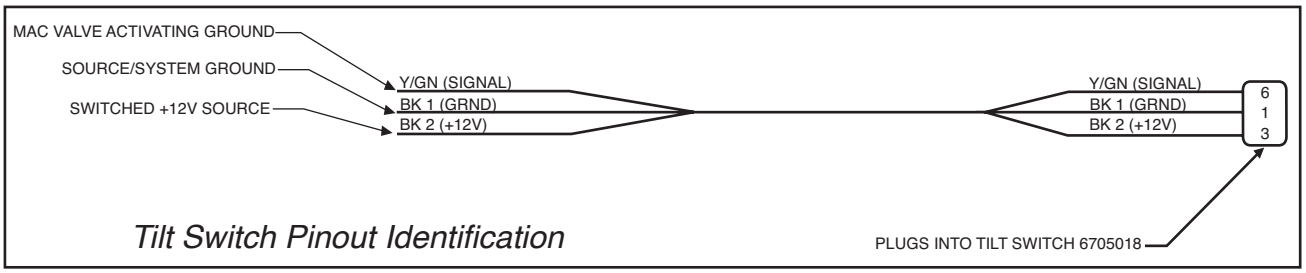

Tilt Switch Pinout Identification

Explanation of L.E.D.'s on Tilt Switches

Description of Operation

Indicators & Lighting

Green Power L.E.D. (PWR)
When the green L.E.D. is illuminated, the device has received power and is ON.

Red Output L.E.D. (OUT)
When the red L.E.D. is solidly illuminated, the output is on and operating properly. if the red L.E.D. is blinking, a fault has been detected. See the "Output Fault States" section for details

Wiring Transitions for New Electronic Tilt Switches - Complete Rewire

DISTRIBUTOR DESCRIPTION	ORIGINAL SCHEMATIC #	TRANSITION SCHEMATIC #
Centennial w/ S2X	9302346	9307853
S2000 w/ DC2	9301618	9307854
VWSB 2016 w/ Aventics	9306416	9307855
VWSB 2007 w/ BT-1	9304309	9307856
VWSB 2010 w/ BT-1	9305034	9307856
STD 1 Ft. Bar 2007 w/ BT-1	9304310	9307858
STD 1 Ft. Bar 2010 w/ BT-1	93015032	9307858
STD 1 Ft. Bar 2016 w/ P & P	9306498	9307449

NOTE: You may notice that Black wire #1 and Black wire #2 changed function, from one model to another. However, the pinouts have remained the same at the Electronic Tilt Switches throughout.
Schematics included in the manual are the specific pages for Tilt Switch wiring. Please refer to complete schematic of the same part number if more info is required.

Mounting bracket for sensor needs to be straight up and down allowing smooth operation inside sensor.

Electrical connector needs to be pointed towards the end of the spraybar.

Loop electrical harness back toward the frame allowing strain relief so connector does not get tugged on.

Original Schematic 9302346 - Centennial w/ S2X

NEW TILT SWITCH

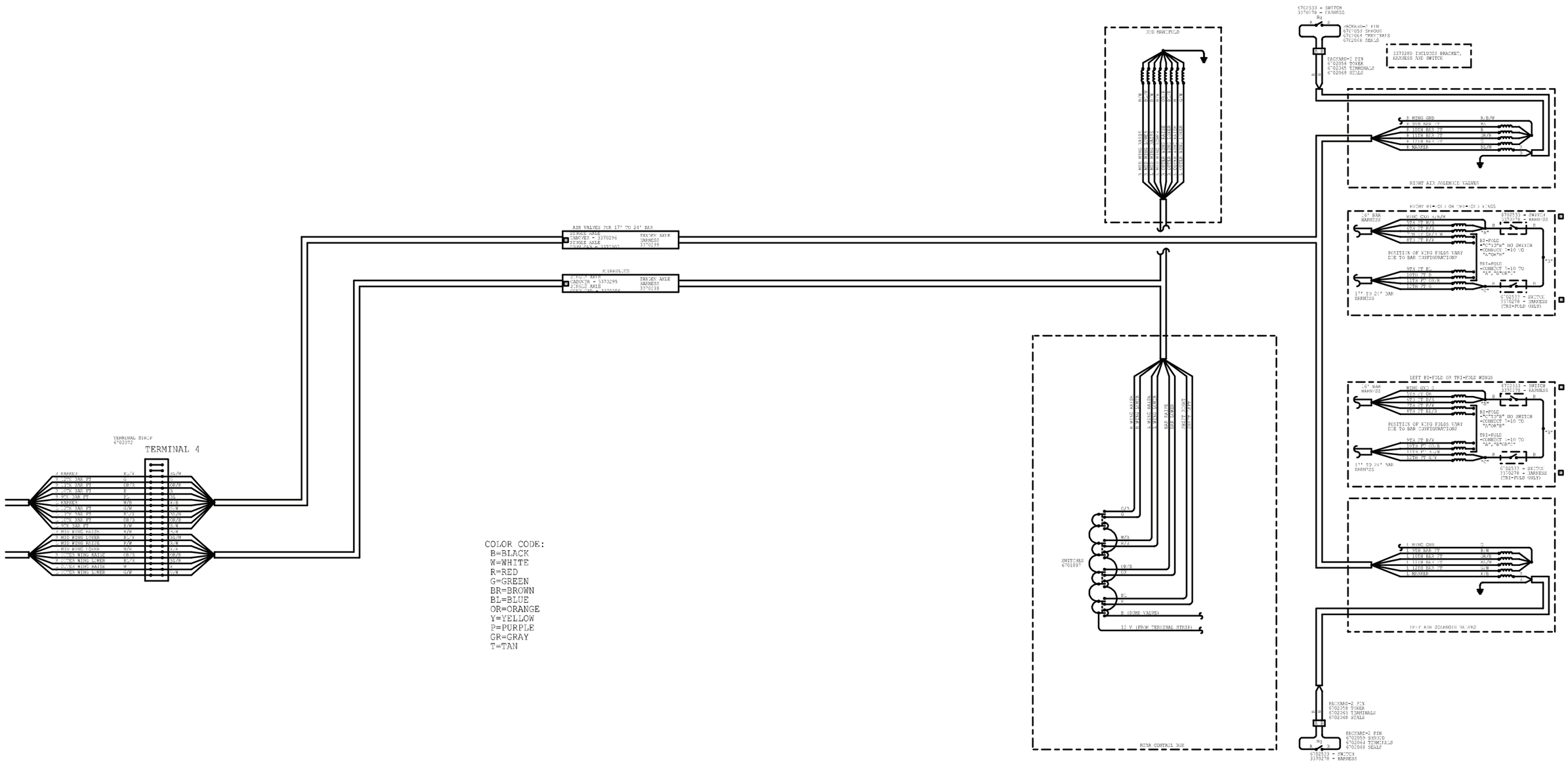

Transition Schematic 9307853 - Centennial w/ S2X

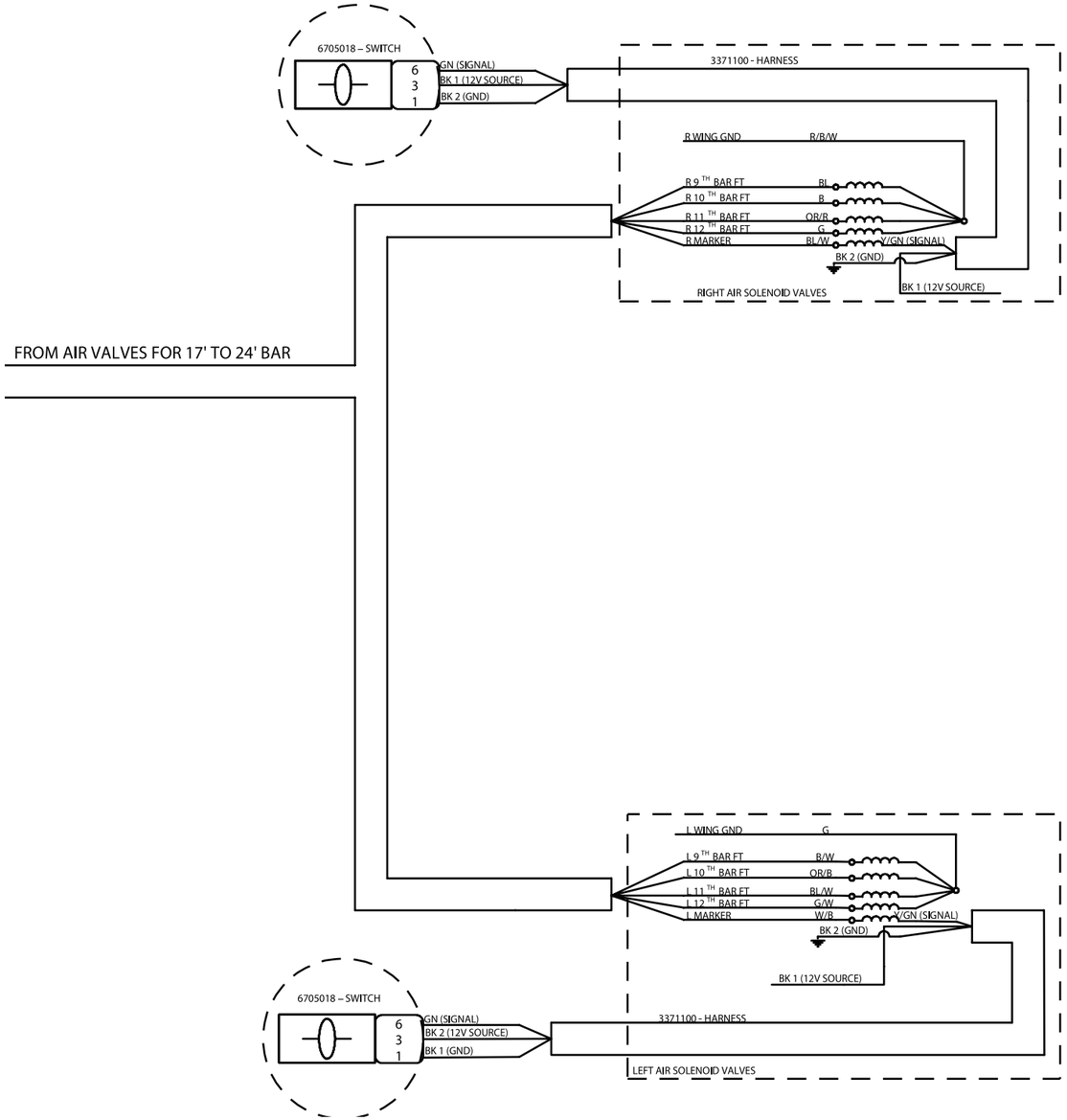

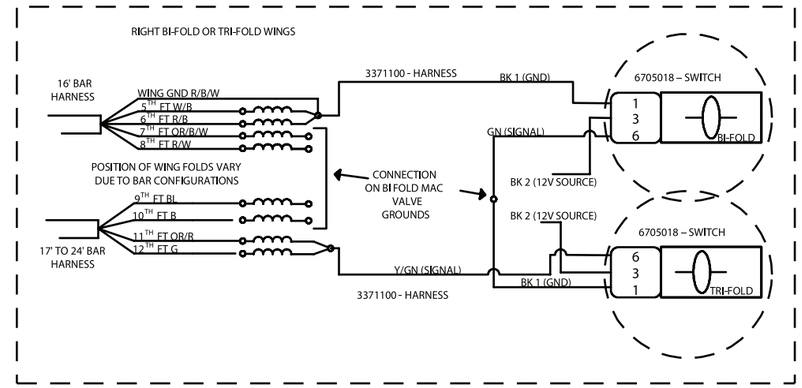

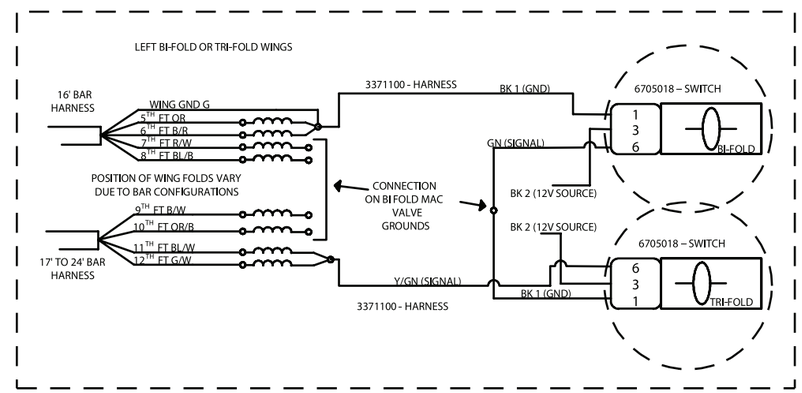

FROM 9302346

COLOR CODE

BK = BLACK
BL = BLUE
BR = BROWN
GN = GREEN
GR = GRAY
OR = ORANGE
PK = PINK
PR = PURPLE
R = RED
T = TAN
V = VIOLET
W = WHITE
Y = YELLOW

NEW TILT SWITCH

Original Schematic 9301618 - S2000 w/ DC2

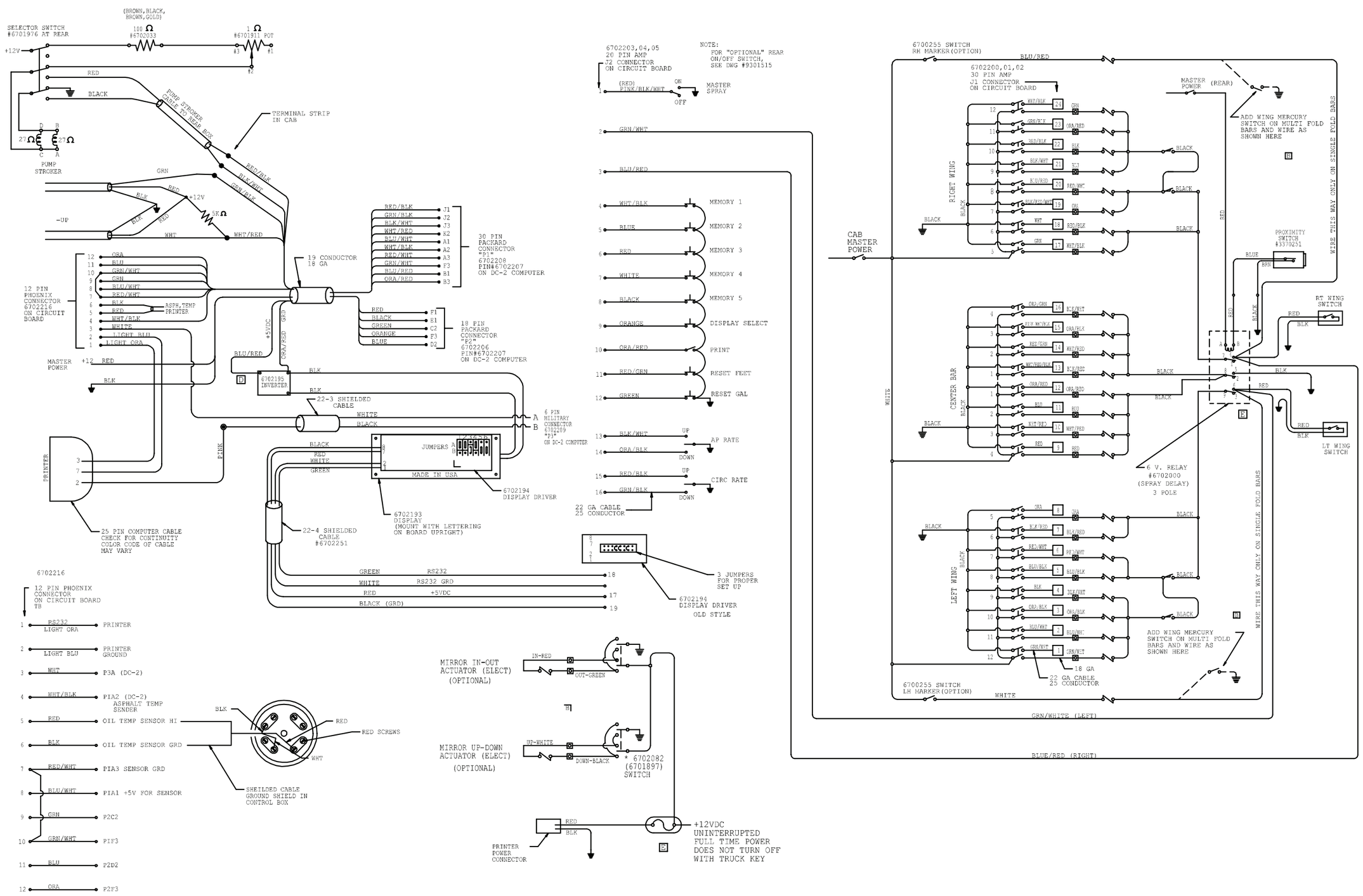

Transition Schematic 9307854 - S2000 w/ DC2

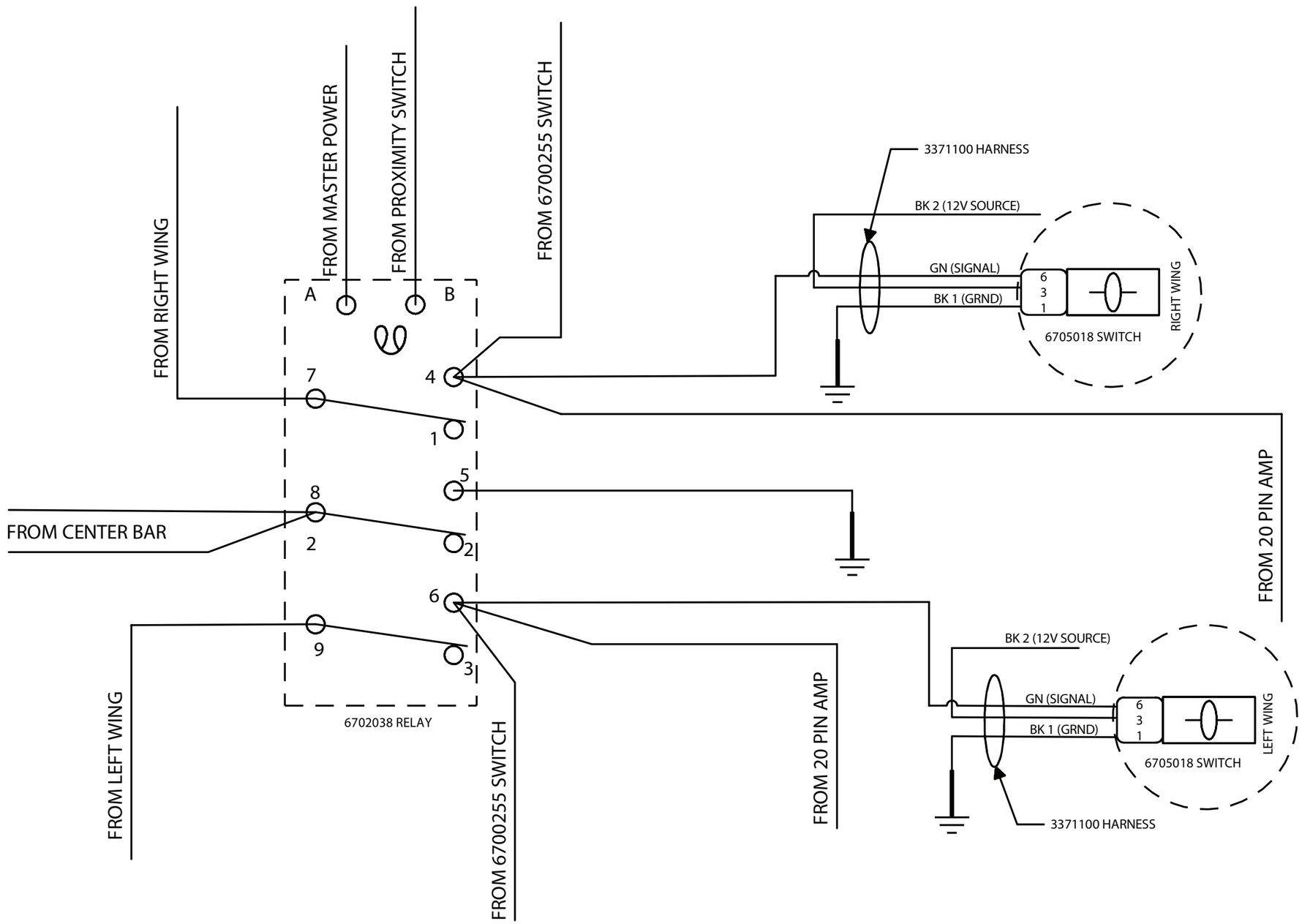

FROM
9301618

Original Schematic 9306416 - VWSB 2016 w/ Aventics

NEW TILT SWITCH

MAIN HARNESS

OUTSIDE OF UNIT

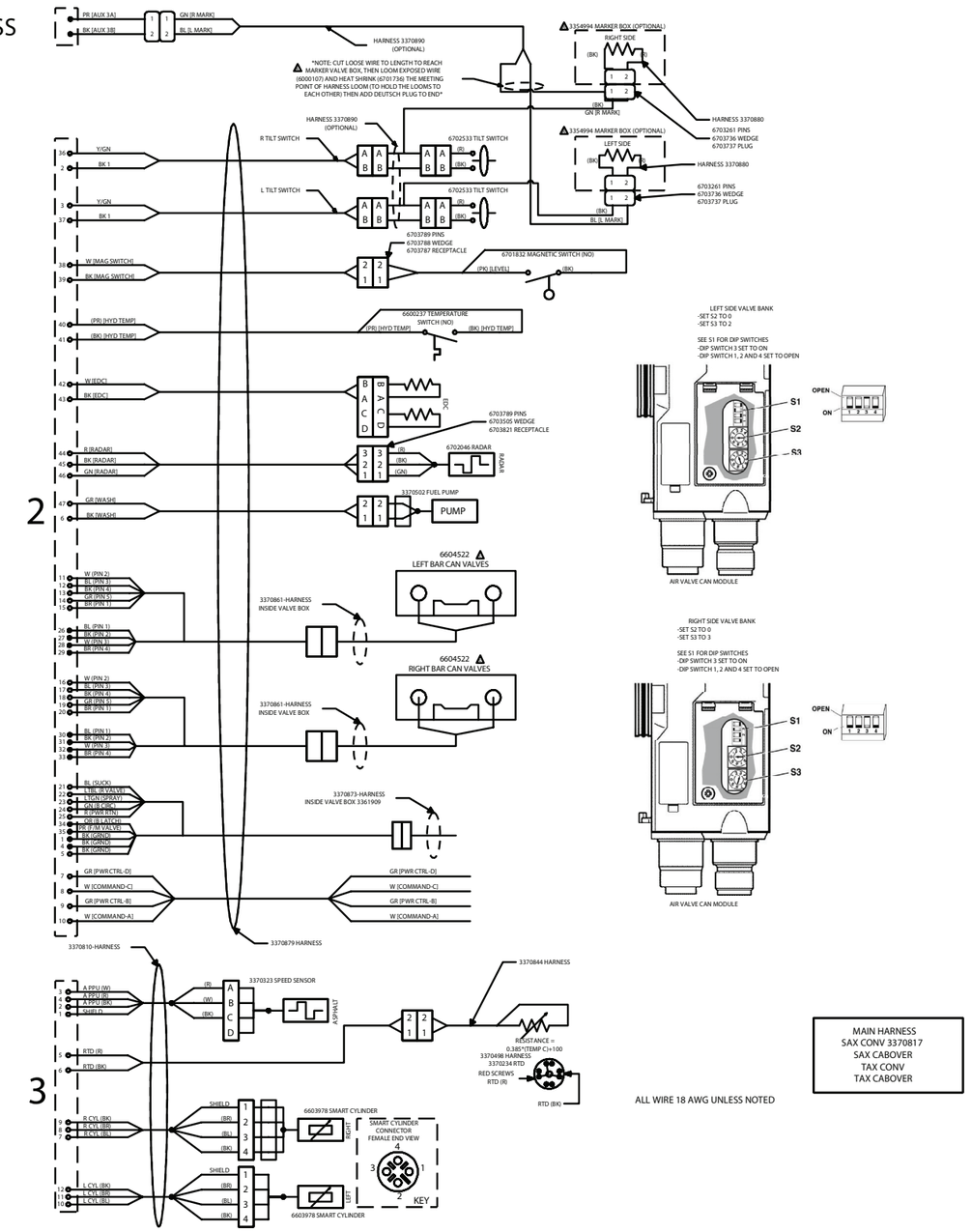

Transition Schematic 9307855 - VWSB 2016 w/ Aventics

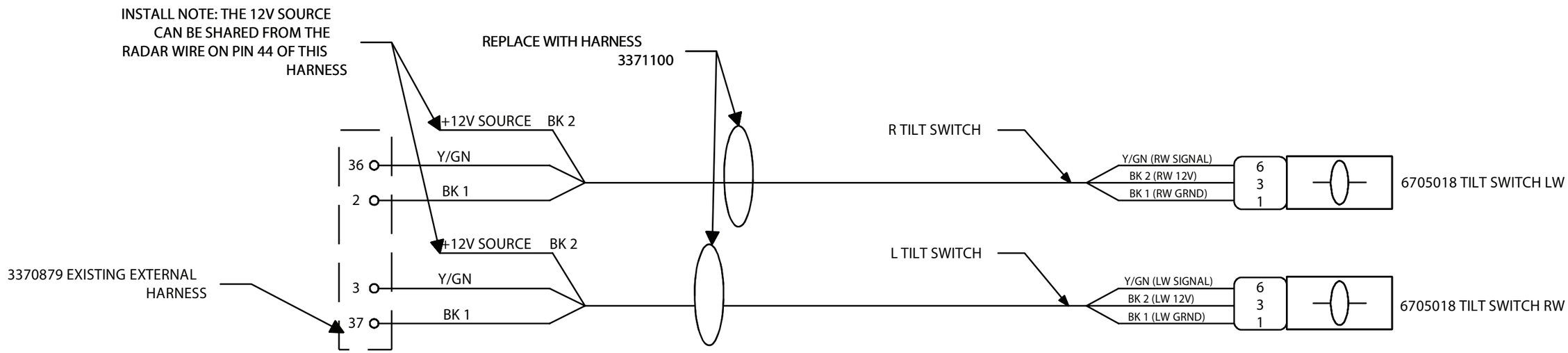

FROM
9306416
PAGE 3

COLOR CODE

BK = BLACK
BL = BLUE
BR = BROWN
GN = GREEN
GR = GRAY
OR = ORANGE
PK = PINK
PR = PURPLE
R = RED
T = TAN
V = VIOLET
W = WHITE
Y = YELLOW

Original Schematic 9304309 - VWSB 2007 w/ BT-1

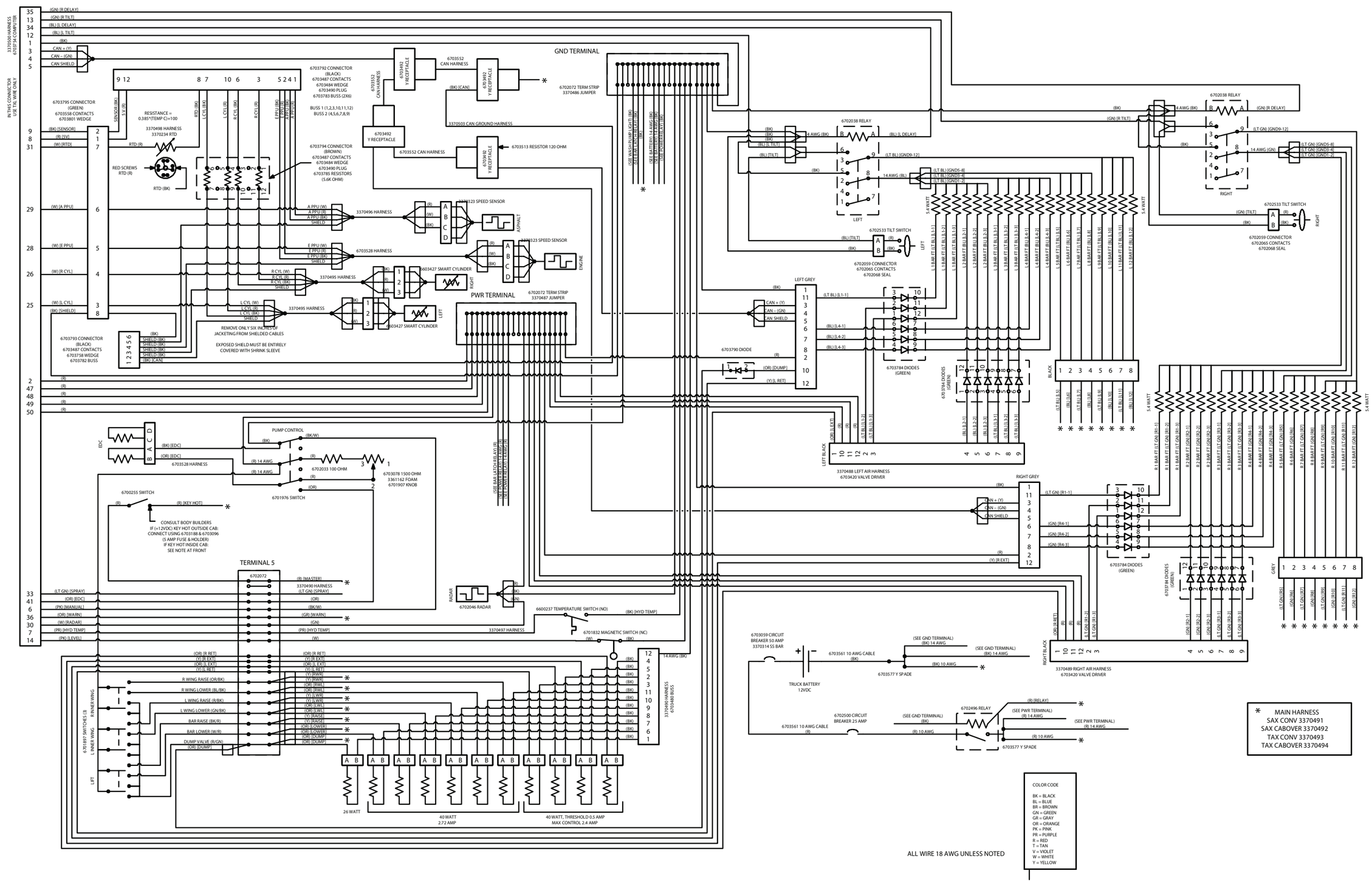

NEW TILT SWITCH

Transition Schematic 9307856 - VWSB 2007 w/ BT-1

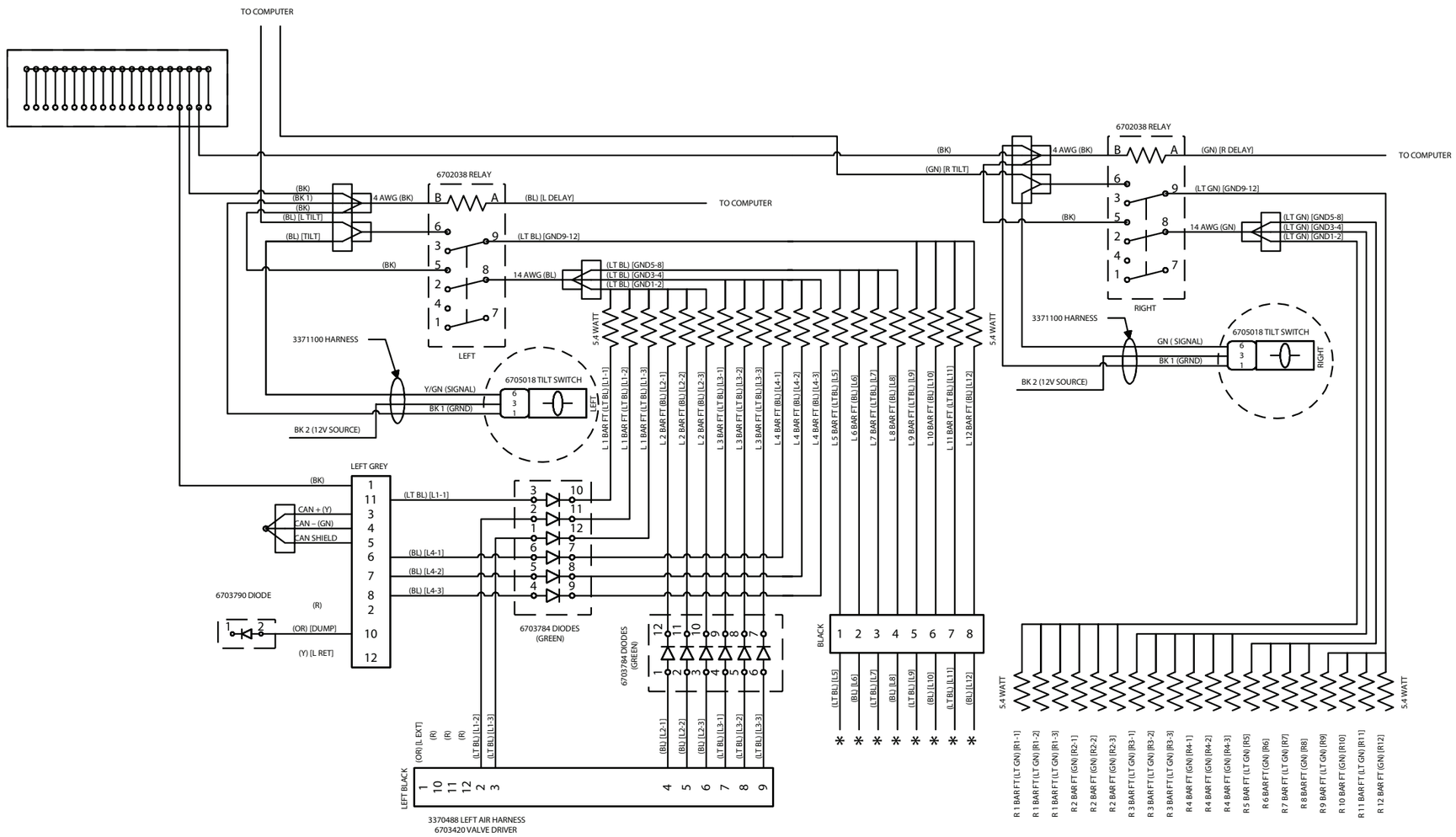

FROM
9304309
AND
9305034

COLOR CODE

BK = BLACK
BL = BLUE
BR = BROWN
GN = GREEN
GR = GRAY
OR = ORANGE
PK = PINK
PR = PURPLE
R = RED
T = TAN
V = VIOLET
W = WHITE
Y = YELLOW

NEW TILT SWITCH

Original Schematic 9305034 - VWSB 2010 w/ BT-1

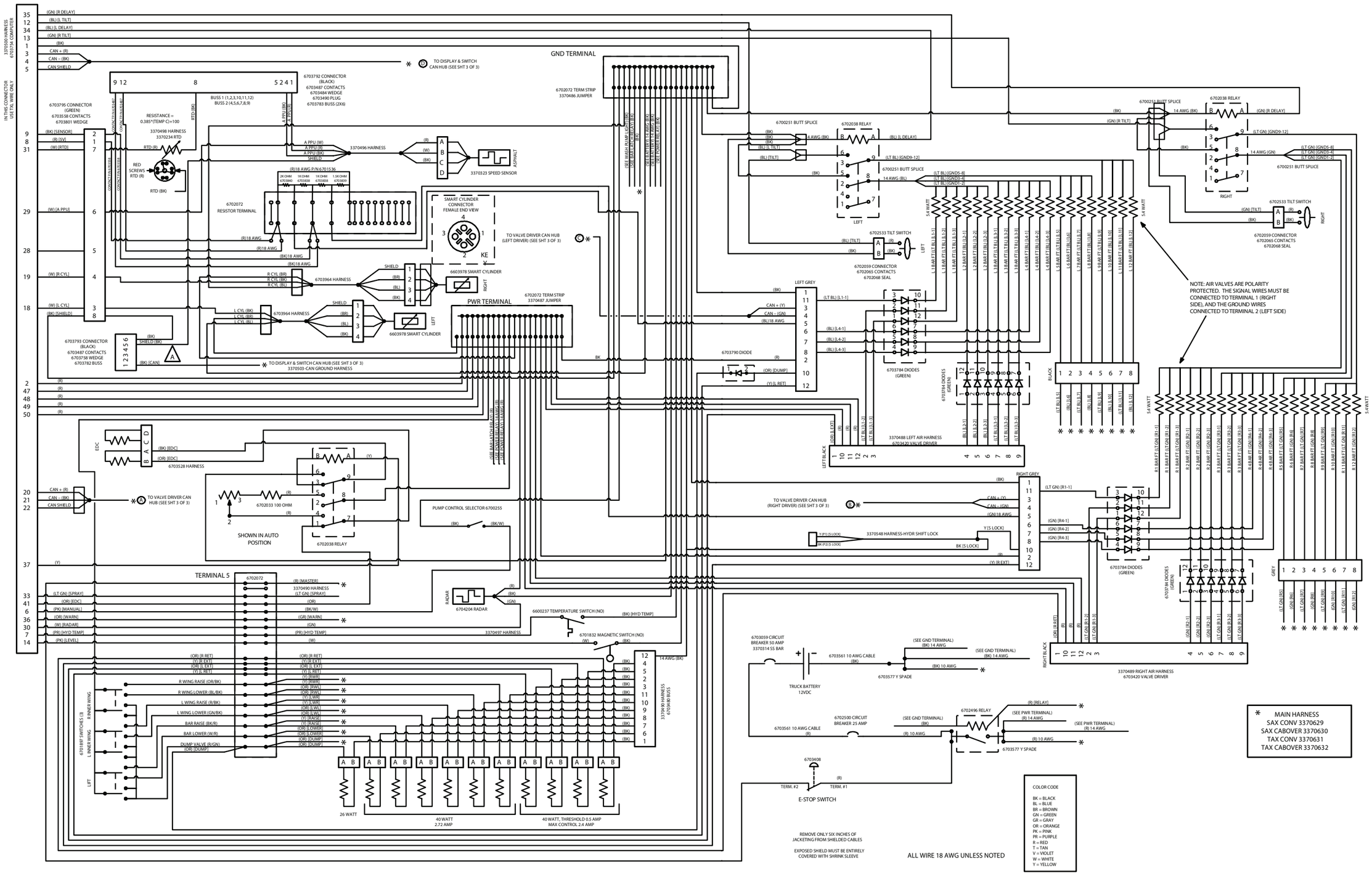

NEW TILT SWITCH

Transition Schematic 9307856 - VWSB 2010 w/ BT-1

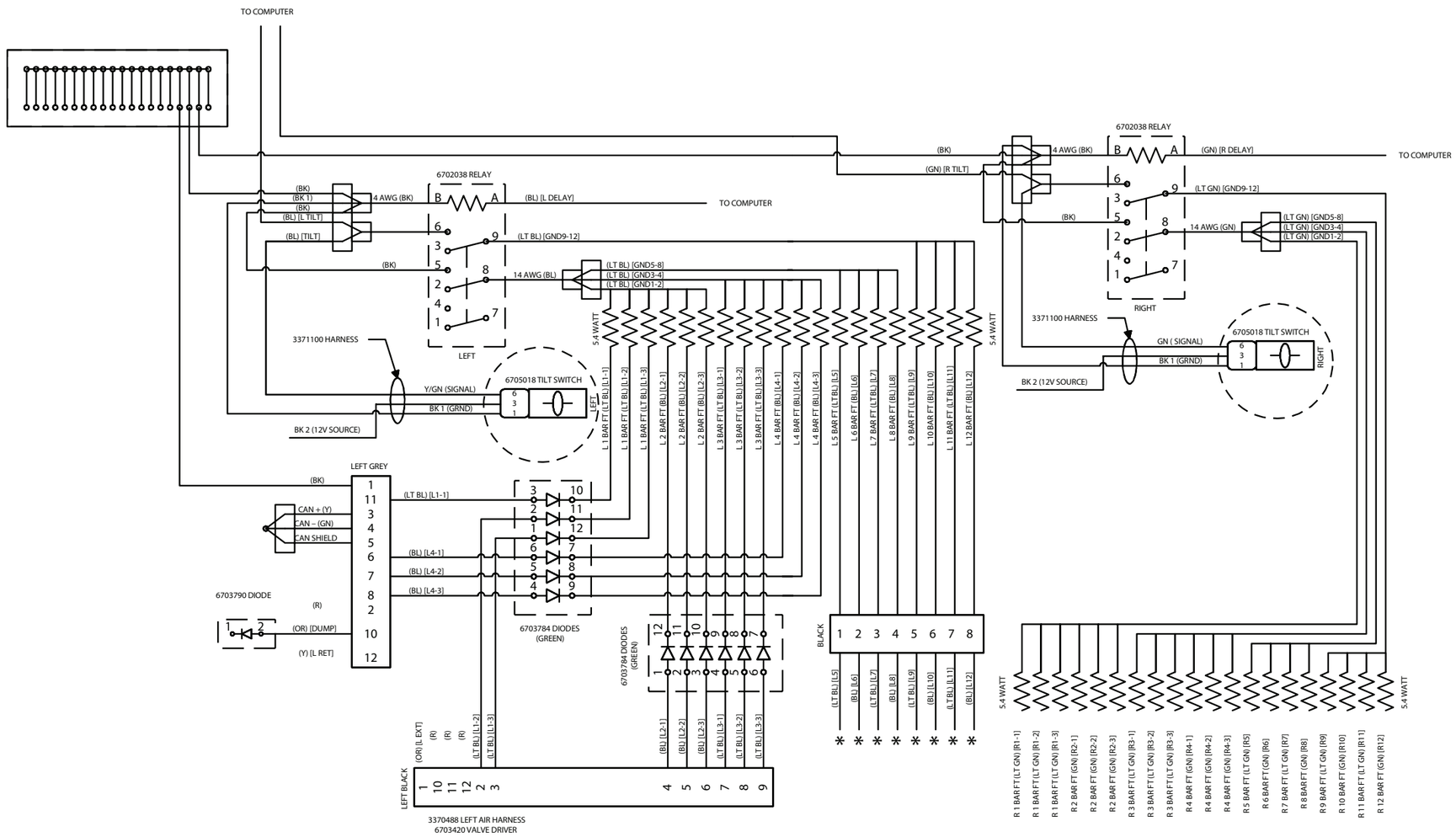

FROM
9304309
AND
9305034

COLOR CODE

BK = BLACK
BL = BLUE
BR = BROWN
GN = GREEN
GR = GRAY
OR = ORANGE
PK = PINK
PR = PURPLE
R = RED
T = TAN
V = VIOLET
W = WHITE
Y = YELLOW

NEW TILT SWITCH

Original Schematic 9304310 - STD 1 Ft. Bar 2007 w/ BT-1

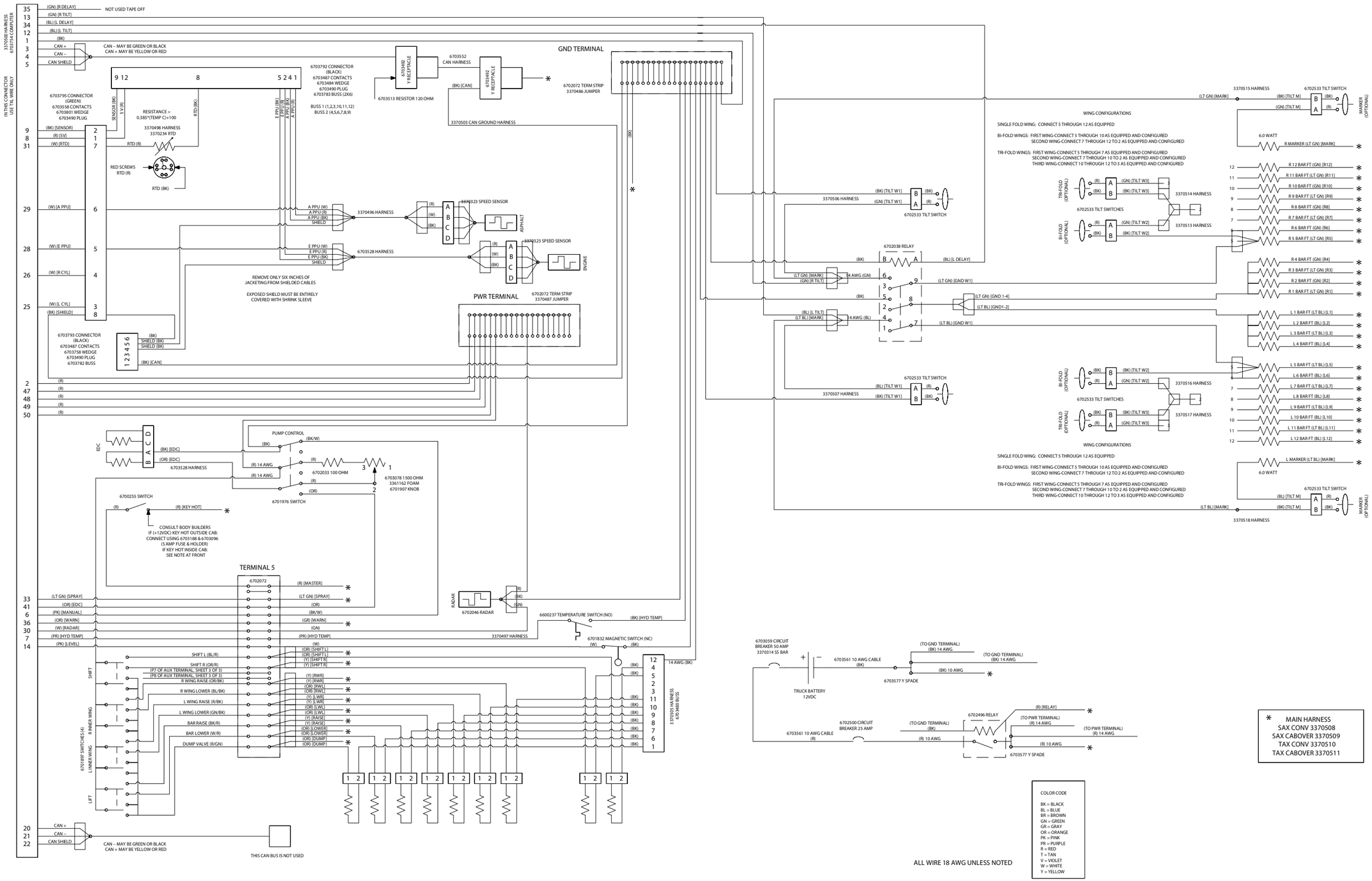

NEW TILT SWITCH

Transitional Schematic 9307858 - STD 1 Ft. Bar 2007 w/ BT-1

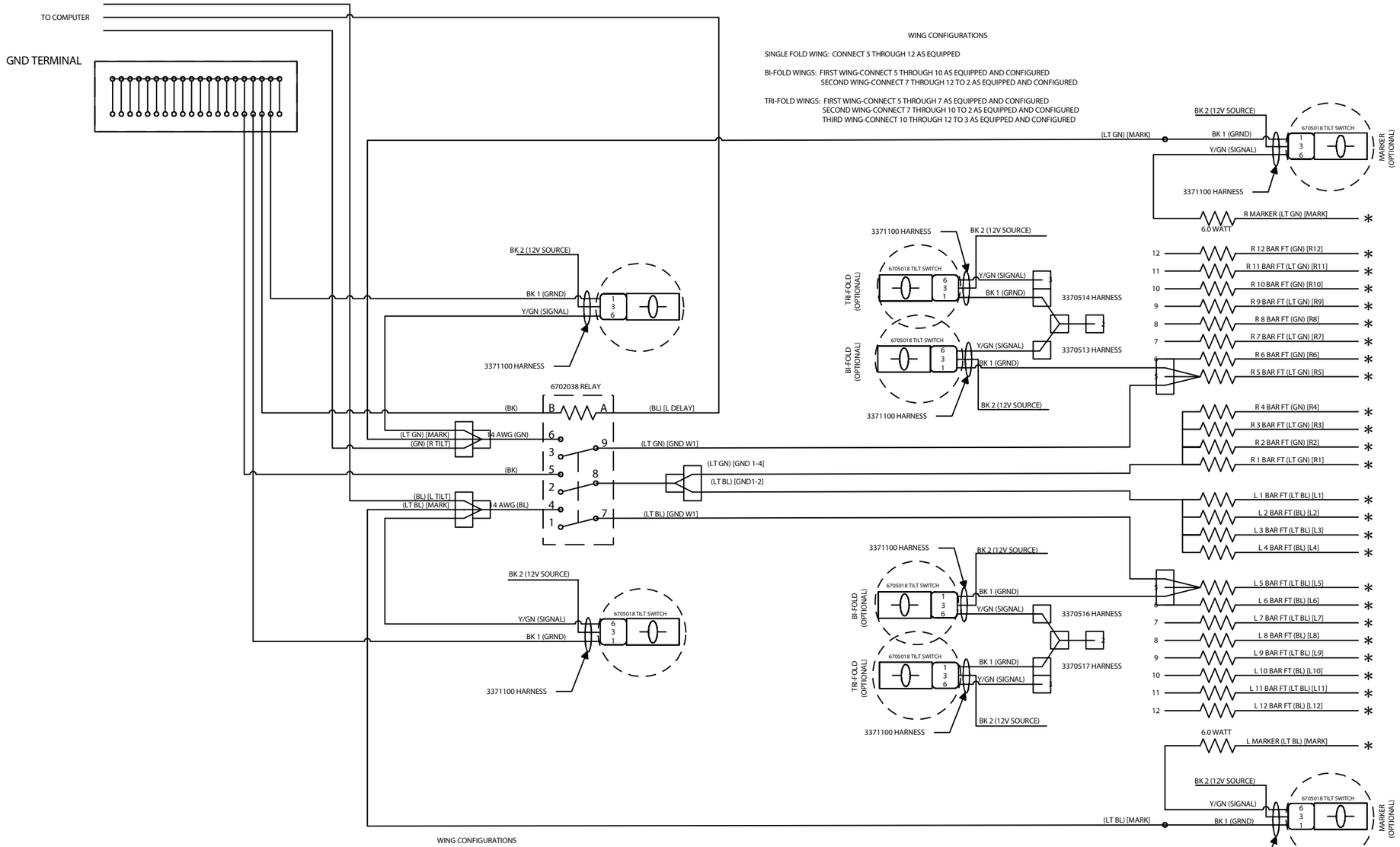

FROM 9304310 & 9305032 PAGE 2

COLOR CODE

BK = BLACK
BL = BLUE
BR = BROWN
GN = GREEN
GR = GRAY
OR = ORANGE
PK = PINK
PR = PURPLE
R = RED
T = TAN
V = VIOLET
W = WHITE
Y = YELLOW

NEW TILT SWITCH

Original Schematic 9305032 - STD 1 Ft. Bar 2010 w/ BT-1

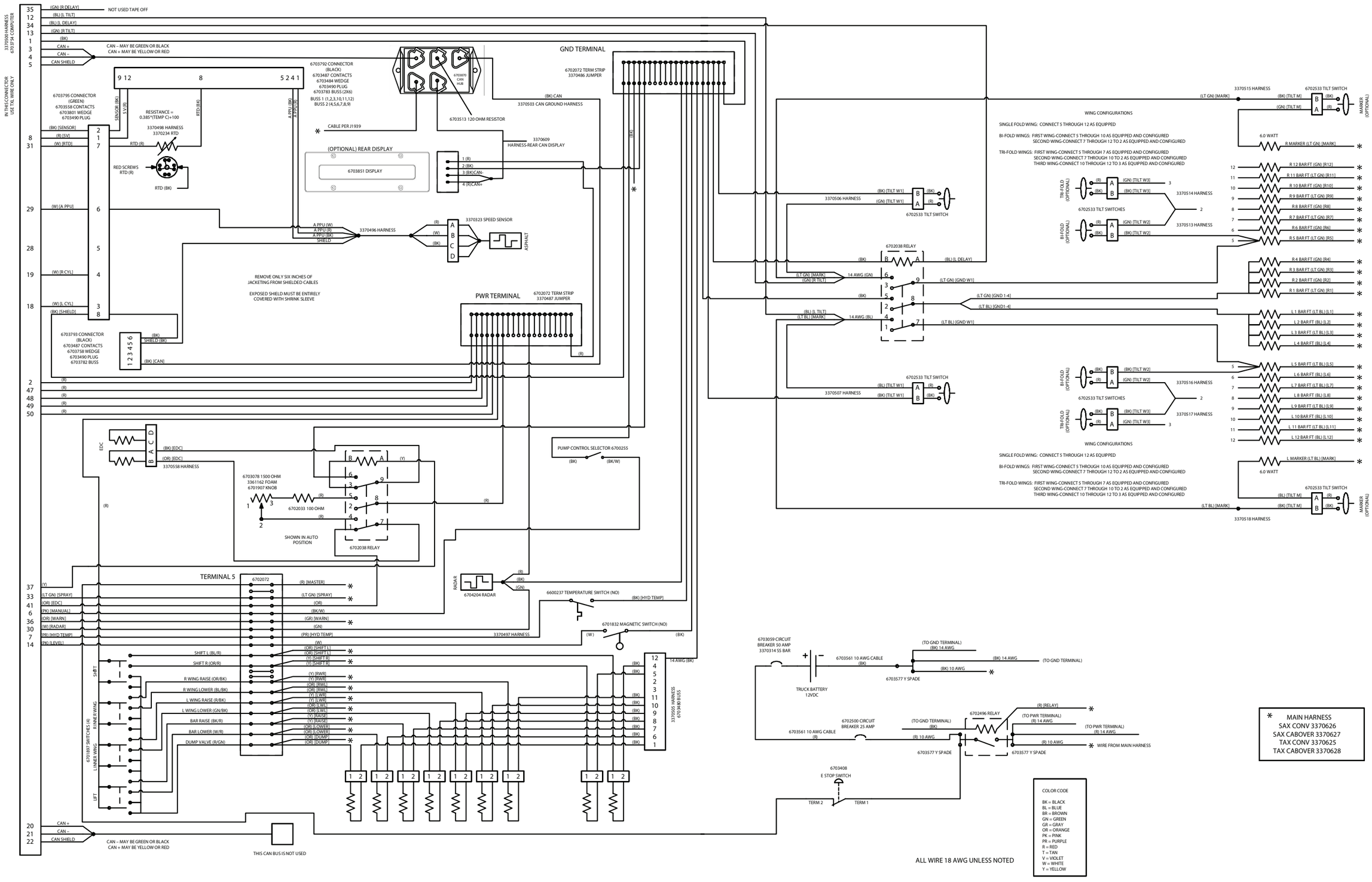

NEW TILT SWITCH

Transitional Schematic 9307858 - STD 1 Ft. Bar 2010 w/ BT-1

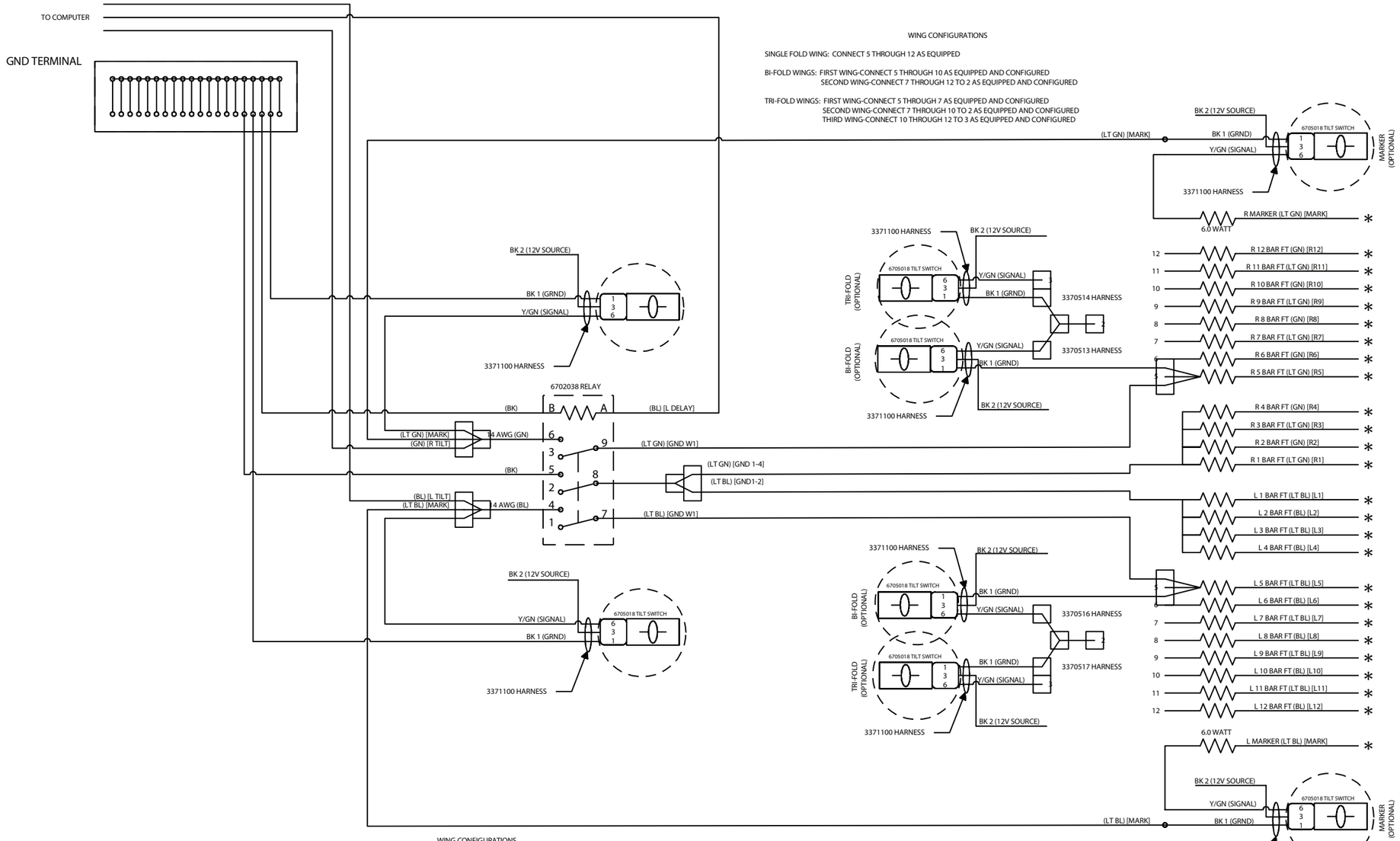

WING CONFIGURATIONS
SINGLE FOLD WING: CONNECT 5 THROUGH 12 AS EQUIPPED
BI-FOLD WINGS: FIRST WING-CONNECT 5 THROUGH 10 AS EQUIPPED AND CONFIGURED
SECOND WING-CONNECT 7 THROUGH 12 TO 2 AS EQUIPPED AND CONFIGURED
TRI-FOLD WINGS: FIRST WING-CONNECT 5 THROUGH 7 AS EQUIPPED AND CONFIGURED
SECOND WING-CONNECT 7 THROUGH 10 TO 2 AS EQUIPPED AND CONFIGURED
THIRD WING-CONNECT 10 THROUGH 12 TO 3 AS EQUIPPED AND CONFIGURED

FROM 9304310 & 9305032 PAGE 2

COLOR CODE

BK = BLACK
BL = BLUE
BR = BROWN
GN = GREEN
GR = GRAY
OR = ORANGE
PK = PINK
PR = PURPLE
R = RED
T = TAN
V = VIOLET
W = WHITE
Y = YELLOW

NEW TILT SWITCH

Original Schematic 9306498 - 2016 w/ P & P

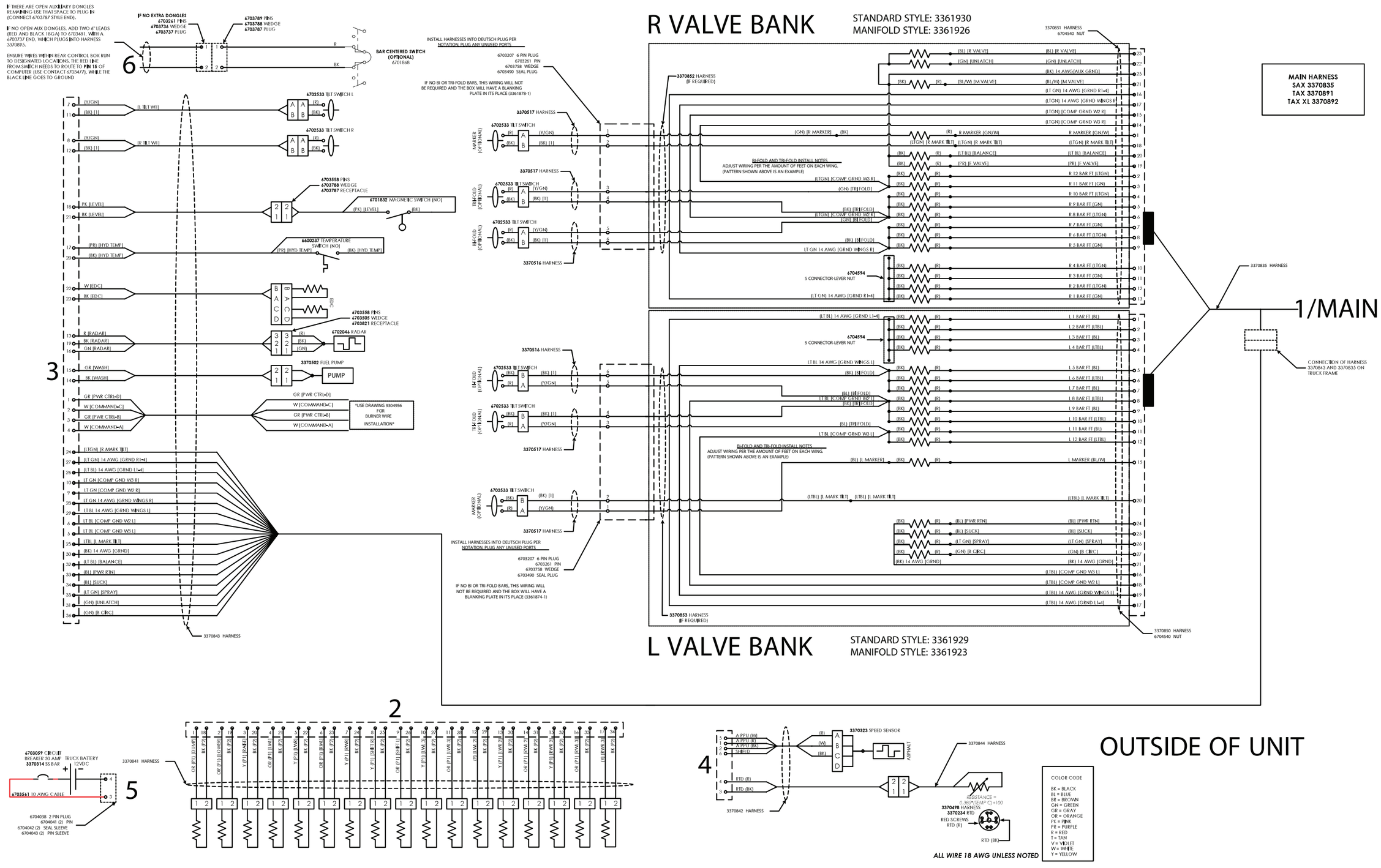

OUTSIDE OF UNIT

NEW TILT SWITCH

Transitional Schematic 9307449 - 2016 w/ P & P

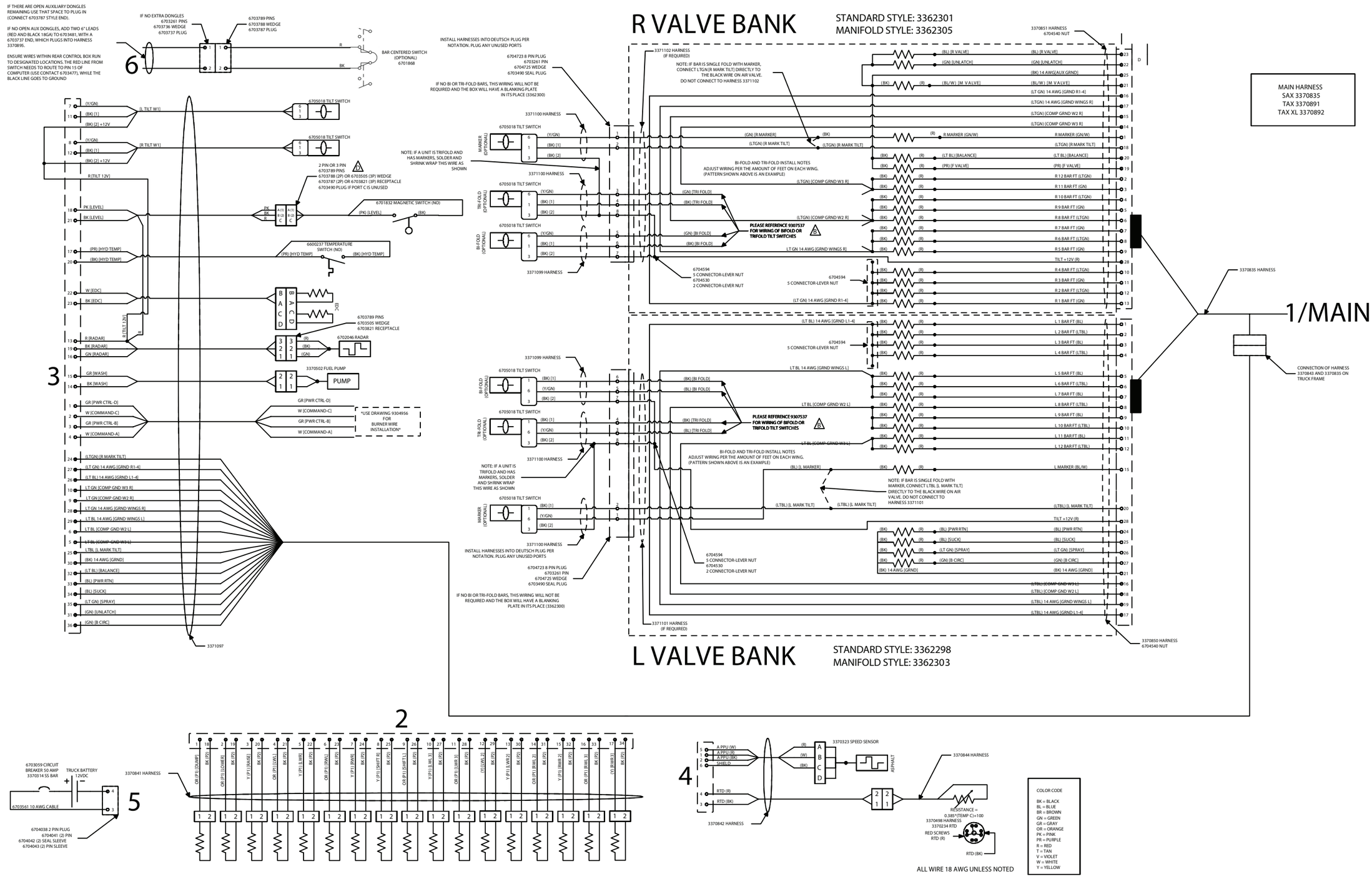

NEW TILT SWITCH